Operator's Manual

Model T700H
Source Monitoring Dilution Calibrator

© TELEDYNE API (TAPI)
9970 CARROLL CANYON ROAD
SAN DIEGO, CA 92131-1106
USA

Toll-free Phone: 800-324-5190
Phone: +1 858-657-9800
Fax: +1 858-657-9816
Email: api-sales@teledyne.com
Website: http://www.teledyne-api.com/

Copyright 2012-2014
Teledyne API

07464A DCN6717
27 February 2014

NOTICE OF COPYRIGHT

© 2012-2014 Teledyne API. All rights reserved.

TRADEMARKS

All trademarks, registered trademarks, brand names or product names appearing in this document are the property of their respective owners and are used herein for identification purposes only.

This page intentionally left blank.

IMPORTANT SAFETY INFORMATION

Important safety messages are provided throughout this manual for the purpose of avoiding personal injury or instrument damage. Please read these messages carefully. Each safety message is associated with a safety alert symbol, and are placed throughout this manual and inside the instrument. The symbols with messages are defined as follows:

WARNING: Electrical Shock Hazard

HAZARD: Strong oxidizer

GENERAL WARNING/CAUTION: Read the accompanying message for specific information.

CAUTION: Hot Surface Warning

Do Not Touch: Touching some parts of the instrument without protection or proper tools could result in damage to the part(s) and/or the instrument.

Technician Symbol: All operations marked with this symbol are to be performed by qualified maintenance personnel only.

Electrical Ground: This symbol inside the instrument marks the central safety grounding point for the instrument.

CAUTION

This instrument should only be used for the purpose and in the manner described in this manual. If you use this instrument in a manner other than that for which it was intended, unpredictable behavior could ensue with possible hazardous consequences.

NEVER use any gas analyzer to sample combustible gas(es)!

Note

Technical Assistance regarding the use and maintenance of this instrument or any other TAPI product can be obtained by contacting TAPI's Technical Support Department:

Telephone: 800-324-5190

Email: sda_techsupport@teledyne.com
or by accessing various service options on our website at http://www.teledyne-api.com/

CONSIGNES DE SÉCURITÉ

Des consignes de sécurité importantes sont fournies tout au long du présent manuel dans le but d'éviter des blessures corporelles ou d'endommager les instruments. Veuillez lire attentivement ces consignes. Chaque consigne de sécurité est représentée par un pictogramme d'alerte de sécurité; ces pictogrammes se retrouvent dans ce manuel et à l'intérieur des instruments. Les symboles correspondent aux consignes suivantes :

AVERTISSEMENT: Risque de choc électrique

DANGER: Oxydant puissant

AVERTISSEMENT GÉNÉRAL / MISE EN GARDE: Lire la consigne complémentaire pour des renseignements spécifiques

MISE EN GARDE: Surface chaude

Ne pas toucher: Toucher à certaines parties de l'instrument sans protection ou sans les outils appropriés pourrait entraîner des dommages aux pièces ou à l'instrument.

Pictogramme « technicien » : Toutes les opérations portant ce symbole doivent être effectuées uniquement par du personnel de maintenance qualifié.

Mise à la terre: Ce symbole à l'intérieur de l'instrument détermine le point central de la mise à la terre sécuritaire de l'instrument.

MISE EN GARDE

Cet instrument doit être utilisé aux fins décrites et de la manière décrite dans ce manuel. Si vous utilisez cet instrument d'une autre manière que celle pour laquelle il a été prévu, l'instrument pourrait se comporter de façon imprévisible et entraîner des conséquences dangereuses.

NE JAMAIS utiliser un analyseur de gaz pour échantillonner des gaz combustibles!

WARRANTY

WARRANTY POLICY (02024G)

Teledyne API (TAPI), a business unit of Teledyne Instruments, Inc., provides that:

Prior to shipment, TAPI equipment is thoroughly inspected and tested. Should equipment failure occur, TAPI assures its customers that prompt service and support will be available.

COVERAGE

After the warranty period and throughout the equipment lifetime, TAPI stands ready to provide on-site or in-plant service at reasonable rates similar to those of other manufacturers in the industry. All maintenance and the first level of field troubleshooting are to be performed by the customer.

NON-TAPI MANUFACTURED EQUIPMENT

Equipment provided but not manufactured by TAPI is warranted and will be repaired to the extent and according to the current terms and conditions of the respective equipment manufacturer's warranty.

PRODUCT RETURN

All units or components returned to Teledyne API should be properly packed for handling and returned freight prepaid to the nearest designated Service Center. After the repair, the equipment will be returned, freight prepaid.

The complete Terms and Conditions of Sale can be reviewed at http://www.teledyne-api.com/terms_and_conditions.asp

CAUTION – Avoid Warranty Invalidation

Failure to comply with proper anti-Electro-Static Discharge (ESD) handling and packing instructions and Return Merchandise Authorization (RMA) procedures when returning parts for repair or calibration may void your warranty. For anti-ESD handling and packing instructions please refer to the manual, Fundamentals of ESD, PN 04786, in its "Packing Components for Return to Teledyne API's Customer Service" section. The ESD manual can be downloaded from our website at http://www.teledyne-api.com under Help Center > Product Manuals in the Special Manuals section; RMA procedures are under Help Center > Return Authorization.

This page intentionally left blank.

ABOUT THIS MANUAL

Presented here is information regarding the documents that are included with this manual (Structure) and how the content is organized (Organization).

STRUCTURE

This T700H manual, PN 07464, is comprised of multiple documents, assembled in PDF format, as listed below.

Part No.	Rev	Name/Description
07464	A	Operation Manual, T700H Source Monitoring Dilution Calibrator
08057	A	Appendix A, Menu Trees and related software documentation
08063	A	Spare Parts List (in Appendix B of this manual)
07620	B	Appendix C, Repair Questionnaire Form
		Appendix D documents
07961	A	Interconnect Diagram (in Appendix D of this manual)
0796101	A	Interconnect List (in Appendix D of this manual)
07322	A	SCH, FREESCALE-PRESS/FLOW
04524	D	SCH, PCA 04523, RELAY CARD
05698	B	SCH, PCA 05697 ADPTR, EXT VALVE DRIVER
05803	B	SCH, PCA 05802, MOTHERBOARD, GEN-5
06698	D	SCH, PCA 06670, INTRFC, LCD TCH SCRN,
06882	B	SCH, LVDS TRANSMITTER BOARD
06731	A	SCH, AUX-I/O BOARD

Note **We recommend that this manual be read in its entirety before any attempt is made to operate the instrument.**

ORGANIZATION

This manual is divided among three main parts and a collection of appendices at the end.

Part I contains introductory information that includes an overview of the calibrator, descriptions of the available options, specifications, installation and connection instructions, and the initial calibration and functional checks.

Part II is comprised of the operating instructions, which include basic, advanced and remote operation, calibration, diagnostics, testing, validating and verifying.

Part III provides detailed technical information, such as maintenance, troubleshooting and service, and principles of operation.

The appendices at the end of this manual provide support information such as, version-specific software documentation, lists of spare parts and schematics.

This page intentionally left blank.

REVISION HISTORY

This section provides information regarding the initial release and subsequent changes to this manual.

07464 T700H Operation Manual			
Date	**Rev**	**DCN**	**Change Summary**
2014 Feb 27	A	6717	Initial Release

This page intentionally left blank.

TABLE OF CONTENTS

PART I – GENERAL INFORMATION 19
1. INTRODUCTION 21
2. SPECIFICATIONS AND APPROVALS 23
2.1. Specifications 23
2.2. Approvals and Certifications 24
2.2.1. SAFETY 24
2.2.2. EMC 24
3. GETTING STARTED 25
3.1. Unpacking and Initial Setup 25
3.1.1. Calibrator Layout 26
3.1.1.1. Front Panel 27
3.1.1.2. Rear Panel 30
3.1.1.3. Internal Layout 32
3.1.2. Electrical Connections 34
3.1.2.1. Power Connection 34
3.1.2.2. Analog Output Connections 34
3.1.2.3. Connecting the Status Outputs 35
3.1.2.4. Connecting the Control Inputs 36
3.1.2.5. Connecting the Control Outputs 38
3.1.2.6. Connecting the Serial Ports 39
3.1.2.7. Connecting to a LAN or the Internet 39
3.1.2.8. Connecting to a Personal Computer (USB Option) 39
3.1.2.9. Connecting to a Multi-drop Network 39
3.2. Pneumatic Connections 40
3.2.1. About Diluent Gas 40
3.2.2. About Calibration Gas 41
3.2.2.1. NIST Traceable Calibration Gas Standards 41
3.2.2.2. Minimum Calibration Gas Source Concentration 41
3.2.3. Connecting Diluent Gas to the Calibrator 41
3.2.4. Connecting Calibration Source Gas to the T700H Calibrator 42
3.2.5. Connecting Gas Outputs from the Calibrator 42
3.2.5.1. Set up for Direct Connections to Other Instruments 42
3.2.6. Exhaust Connection 42
3.3. Initial Operation 43
3.3.1. Start Up 43
3.3.2. Warm Up 43
3.3.3. Warning Messages 43
3.3.4. Functional Check 45
3.3.5. Setting Up the Calibration Gas Inlet Ports 45
3.3.6. Default Gas Types 46
3.3.7. User Defined Gas Types 46
3.3.7.1. User Defined Gas Types – General 46
3.3.7.2. User Defined Gas Types – Defining the Gas Name 47
3.3.7.3. User Defined Gas Types – Setting the MOLAR MASS 48
3.3.7.4. Enabling and Disabling Gas Types 50
3.3.8. Defining Calibration Source Gas Cylinders 51
3.3.8.1. Setting Up the Ports with Single Gas Cylinders 51
3.3.8.2. Setting Up the Ports with Multiple Gas Cylinders 54
3.3.9. Setting the T700H's Total Gas Flow Rate 55
4. OPTIONAL HARDWARE AND SOFTWARE 57
4.1. Gas Flow Options 57
4.1.1. Flow Rate Options (OPT 07A, OPT 7B, OPT 08A & OPT 08B) 57
4.1.2. Three MFC Calibrator Source Gas 58
4.1.3. Gas Blending Option 59

4.1.3.1. Enabling Gas Blending Option 60
4.1.3.2. Gas Blending Setup and Generation....62
4.1.3.3. Front Panel Display During Generate Mode 64
4.1.3.4. GPT Operation with Gas Blending Option 64
4.2. Rack Mount Kits (OPT 20A, OPT 20B & OPT 21)....65
4.3. Carrying Strap Handle (OPT 29)....66
4.4. Spare Parts Kits .... **Error! Bookmark not defined.**
4.4.1. T700H Expendables Kit (OPT 46A).... **Error! Bookmark not defined.**
4.4.2. T700H Spare Parts Kit (OPT 46B & OPT 46C) .... **Error! Bookmark not defined.**
4.5. Communication Options....66
4.5.1. Serial Communications Cables (OPT 60A, 60B, 60C, and 60D) 66
4.5.2. RS-232 Multi-drop (OPT 62)....66
4.6. External Valve Driver (OPT 48A & OPT 48B)....67
PART II – OPERATING INSTRUCTIONS 69
5. BASIC OPERATION 71
5.1. Test Functions....71
5.2. Overview of Operating modes 73
5.3. STANDBY MODE 74
5.4. GENERATE MODE....76
5.4.1. GENERATE → AUTO: Basic Generation of Calibration Mixtures....77
5.4.2. GENERATE → ZERO: Generating Diluent 79
5.4.3. GENERATE → MAN: Generating Calibration Mixtures Manually 79
5.4.3.1. Determining the Source Gas Flow Rate....80
5.4.3.2. Determining the Diluent Gas Flow Rate....81
5.4.3.3. Setting the Source Gas and Diluent Flow Rates Using the GENERATE → MAN Menu 82
5.4.4. GENERATE → GPTZ: Generating GPT Flow Conditions....83
5.4.5. GENERATE → GPT: Generating No_2 using Gas Phase Titration Calibration 84
5.4.5.1. GPT Theory....84
5.4.5.2. Choosing an Input Concentration for the NO during GPT....84
5.4.5.3. Determining the TOTAL FLOW for GPT Calibration Mixtures 85
5.4.5.4. Backpressure Avoidance....86
5.4.5.5. T700H Calibrator GPT Operation....87
5.4.5.6. Initiating and Fine-Tuning (Trimming) a GPT Calibration Gas Generation....88
5.4.6. GENERATE → PURGE: Activating the Purge Feature....89
5.4.7. GENERATE →ACT>: VIEWING CONCENTRATIONS Generated from Multi-Gas Cylinders....92
5.5. AUTOMATIC CALIBRATION SEQUENCES....93
5.5.1. SETUP → SEQ: Programming Calibration Sequences....93
5.5.1.1. Activating a Sequence from the T700H Front Panel....95
5.5.1.2. Naming a Sequence....96
5.5.1.3. Setting the Repeat Count for a Sequence 97
5.5.1.4. Using the T700H's Internal Clock to Trigger Sequences 98
5.5.1.5. Setting Up Control Inputs for a Sequence....101
5.5.1.6. Setting Up Control Outputs for a Sequence....102
5.5.1.7. Setting the PROGRESS Reporting Mode for the Sequences....104
5.5.2. Adding Sequence Steps 105
5.5.2.1. The GENERATE Step 106
5.5.2.2. The GPT Step....107
5.5.2.3. The GPTZ Step 108
5.5.2.4. The PURGE Step 109
5.5.2.5. The STANDBY Step....109
5.5.2.6. The DURATION Step 110
5.5.2.7. The EXECSEQ Step....111
5.5.2.8. The CC OUTPUT Step 112
5.5.2.9. The MANUAL Gas Generation Step 113
5.5.2.10. Deleting or Editing an Individual Step in a Sequence 115
5.5.3. Deleting a Sequence....116

5.6. SETUP → CFG 117
5.7. SETUP → CLK 118
5.7.1. Setting the Internal Clock's Time and Day 118
5.7.2. Adjusting the Internal Clock's Speed 119
5.8. SETUP → PASS 120
5.9. SETUP → DIAG → TEST CHAN OUTPUT: Using the TEST Channel Analog Output 123
5.9.1. Configuring the TEST CHANNEL Analog Output 123
5.9.1.1. The Analog I/O Configuration Submenu. 123
5.9.1.2. Selecting a Test Channel Function to Output 125
5.9.1.3. Configuring the TEST CHANNEL VOLTAGE RANGE 127
5.9.1.4. Turning the TEST CHANNEL Over-Range Feature ON/OFF 128
5.9.1.5. Adding a Recorder Offset to the TEST CHANNEL 129
5.9.2. TEST CHANNEL CALIBRATION 130
5.9.2.1. Enabling or Disabling the TEST CHANNEL AUTOCAL Feature 130
5.9.2.2. Automatic TEST CHANNEL Calibration 131
5.9.2.3. Manually Calibrating the TEST CHANNEL Configured for Voltage Ranges 133
5.9.3. AIN Calibration 135
5.10. SETUP → MORE → VARS: Internal Variables (VARS) 136
6. REMOTE OPERATION 139
6.1. Using the Analyzer's Communication Ports 139
6.1.1. RS-232 DTE and DCE Communication 139
6.1.2. Serial COMM Port Default Settings and Connector Pin Assignments 140
6.1.3. COMM Port Baud Rate 142
6.1.4. COMM Port Communication Modes 143
6.1.5. COMM Port Testing 145
6.1.6. Machine ID 146
6.1.7. Terminal Operating Modes 147
6.1.7.1. Help Commands in Terminal Mode 147
6.1.7.2. Command Syntax 148
6.1.7.3. Data Types 149
6.1.7.4. Status Reporting 149
6.1.7.5. COMM Port Password Security 150
6.2. Remote Access by Modem 151
6.2.1. Multi-drop RS-232 Set Up 153
6.3. RS-485 Configuration of COM2 156
6.4. Remote Access via the USB Port (Option) 156
6.5. Remote Access via the Ethernet 158
6.5.1. Configuring the Ethernet Interface using DHCP 159
6.5.1.1. Manually Configuring the Network IP Addresses 162
6.5.2. Changing the Calibrator's HOSTNAME 164
6.6. MODBUS Quick Setup 165
6.7. APICOM Remote Control Program 167
7. CALIBRATION AND VERIFICATION 169
7.1. Viewing the Performance Statistics for the T700H's MFC's 169
7.2. Calibrating the Output of the T700H's MFC's 170
7.2.1. Setup for Verification and Calibration of the MFC's 171
7.2.2. Verifying and Calibrating the T700H's MFC's 172
7.3. Calibrating the O_3 Generator 173
7.3.1. Setup for Verification and Calibration the O_3 Generator 173
7.3.1.1. Setup Using Direct Connections 173
7.3.2. O_3 Generator Calibration Procedure 174
7.3.2.1. Viewing O_3 Generator Calibration Points 174
7.3.2.2. Adding or Editing O_3 Generator Calibration Points 175
7.3.2.3. Deleting O_3 Generator Calibration Points 176
7.3.2.4. Turning O_3 Generator Calibration Points ON / OFF 177
7.3.2.5. Calibrating the O_3 Generator 177

7.4. T700H Gas Pressure Sensor Calibration 177
7.4.1.1. Calibrating the Diluent, Cal Gas, and O_3 Generator Pressure Sensors 178
PART III – TECHNICAL INFORMATION 181
8. MAINTENANCE SCHEDULE 183
8.1. Maintenance Schedule 183
8.2. Maintenance Procedures 185
8.2.1. Dryer Desiccant 185
8.2.2. Leak Check 185
9. GENERAL TROUBLESHOOTING & SERVICE 189
9.1. General Troubleshooting 189
9.1.1. Fault Diagnosis with WARNING Messages 190
9.1.2. Fault Diagnosis With Test Functions 194
9.1.3. Using the Diagnostic Signal I/O Function 194
9.2. Using the Analog Output Test Channel 196
9.3. Using the Internal Electronic Status LEDs 196
9.3.1. CPU Status Indicator 196
9.3.2. Relay PCA Status LEDs 197
9.3.2.1. I^2C Bus Watchdog Status LED 197
9.3.2.2. O_3 Valve Status LED 198
9.3.3. Valve Driver PCA STATUS LEDs 199
9.4. Subsystem Checkout 200
9.4.1. Verify Subsystem Calibration 200
9.4.2. AC Main Power 200
9.4.3. DC Power Supply 201
9.4.4. I^2C Bus 202
9.4.5. Touchscreen Interface 202
9.4.6. LCD Display Module 202
9.4.7. Relay PCA 203
9.4.8. Valve Driver PCA 203
9.4.9. Input Gas Pressure Assembly 204
9.4.10. O_3 Generator Pressure Assembly 205
9.4.11. Motherboard 205
9.4.11.1. A/D Functions 205
9.4.11.2. Test Channel / Analog Outputs Voltage 206
9.4.11.3. Status Outputs 207
9.4.11.4. Control Inputs 208
9.4.11.5. Control Outputs 208
9.4.12. CPU 209
9.4.13. The Calibrator Doesn't Appear on the Lan or Internet 209
9.4.14. RS-232 Communications 210
9.4.14.1. General RS-232 Troubleshooting 210
9.4.14.2. Troubleshooting Calibrator/Modem or Terminal Operation 210
9.4.15. Box / Chassis Temperature 211
9.5. Service Procedures 211
9.5.1. Disk-On-Module Replacement Procedure 211
9.6. Technical Assistance 212
10. PRINCIPLES OF OPERATION 213
10.1. Basic Principles of Source Monitoring Dilution Calibration 213
10.1.1. Gas Phase Titration Mixtures for O_3 and NO 214
10.2. Pneumatic Operation 215
10.2.1. Gas Flow Control 215
10.2.1.1. Diluent and Source Gas Flow Control 215
10.2.1.2. Flow Control Assembly for O_3 Generator 216
10.2.1.3. Critical Flow Orifice 217
10.2.2. Internal Gas Pressure Sensors 217

10.3. Electronic Operation 218
10.3.1. Overview 218
10.3.2. CPU 219
10.3.2.1. Disk-on-Module (DOM) 220
10.3.3. Relay PCA 221
10.3.3.1. Valve Control 222
10.3.3.2. Relay PCA Status LED & Watch Dog LED 222
10.3.3.3. Relay PCA Watchdog Indicator (D1) 223
10.3.4. Valve Driver PCA 223
10.3.4.1. Valve Driver PCA Watchdog Indicator 223
10.3.5. Motherboard 224
10.3.5.1. A to D Conversion 224
10.3.5.2. Sensor Inputs 224
10.3.5.3. Thermistor Interface 224
10.3.5.4. Analog Outputs 224
10.3.5.5. External Digital I/O 225
10.3.5.6. I^2C Data Bus 225
10.3.5.7. Power-up Circuit 225
10.3.6. Input Gas Pressure Sensor PCA 225
10.3.7. Power Supply and Circuit Breaker 226
10.4. Front Panel Touchscreen/Display Interface 227
10.4.1.1. Front Panel Interface PCA 227
10.5. Software Operation 228
10.6. Ozone Gas Generation and Air Flow 229
10.6.1. The O_3 Generator 229
10.6.2. O_3 Generator – Electronic Operation 231
10.6.2.1. Pressure Sensor for the O_3 Generator 231

LIST OF FIGURES

Figure 3-1: T700H Front Panel Layout 27
Figure 3-2: Display Screen and Touch Control 27
Figure 3-5: T700H Internal Layout – Top View 32
Figure 3-6: T700H Pneumatic Diagram 33
Figure 3-7: T700H Analog Output Connector 34
Figure 3-8: Status Output Connector 35
Figure 3-9: T700H Digital Control Input Connectors 37
Figure 3-10: T700H Digital Control Output Connector 38
Figure 3-11: Set up for T700H – Connecting the Basic T700H to a Sample Manifold 42
Figure 4-1: Basic T700H with Multiple Calibration Gas MFCs 59
Figure 4-4: T700H Rear Panel Valve Driver Installed 67
Figure 4-5: Valve Driver PCA Layout 68
Figure 5-1: Viewing T700H Test Functions 71
Figure 5-2: Front Panel Display 73
Figure 5-3: Gas Flow through T700H during STANDBY 75
Figure 5-4: Gas Flow through Basic T700H in GENERATE Mode 76
Figure 5-6: Gas Flow through T700H in PURGE Mode 90
Figure 5-7: T700H TEST CHANNEL Connector 123
Figure 5-8: Setup for Calibrating the TEST CHANNEL 133
Figure 6-1: Default Pin Assignments for Back Panel COMM Port Connectors (RS-232 DCE & DTE) 140
Figure 6-2: Default Pin Assignments for CPU COMM Port Connector (RS-232). 141
Figure 6-5: APICOM Remote Control Program Interface 167

Figure 7-1: Location of MFC Outlet Ports....171
Figure 7-2: O_3 Generator Calibration Setup – Direct Connections....173
Figure 7-3: Pressure Monitor Points – T700H....178
Figure 9-1: Example of Signal I/O Function....195
Figure 9-2: CPU Status Indicator....196
Figure 9-3: Relay PCA LED's Used for Troubleshooting....198
Figure 9-4: Valve Driver PCA Status LEDS Used for Troubleshooting....199
Figure 9-5: Location of DC Power Test Points on Relay PCA....201
Figure 10-1: Location of Gas Flow Control Assembly....216
Figure 10-2: Flow Control Assembly & Critical Flow Orifice....217
Figure 10-3: T700H Electronic Block Diagram....218
Figure 10-4: T700H CPU Board Annotated....220
Figure 10-5: Relay PCA....221
Figure 10-6: Status LED Locations – Relay PCA....222
Figure 10-7: Status LED Locations – Valve Driver PCA....223
Figure 10-8: T700H Power Distribution Block Diagram....226
Figure 10-9: Front Panel Display Interface Block Diagram....227
Figure 10-10: Schematic of Basic Software Operation....228
Figure 10-11: O_3 Generator Principle....230
Figure 10-12: O_3 Generator Valve and Flow Control Locations....230
Figure 10-13: O_3 Generator – Electronic Block Diagram....231

LIST OF TABLES

Table 2-1: T700H Dilution System Specifications....23
Table 2-3: T700H Specifications for Ozone Generator....23
Table 3-3: Status Output Pin Assignments....36
Table 3-4: T700H Control Input Pin Assignments....36
Table 3-5: T700H Control Output Pin Assignments....38
Table 3-6: NIST Standards for CO_2....**Error! Bookmark not defined.**
Table 3-7: NIST Standards for CO....**Error! Bookmark not defined.**
Table 3-8: NIST Standards for H_2S....**Error! Bookmark not defined.**
Table 3-9: NIST Standards for CH_4....**Error! Bookmark not defined.**
Table 3-10: NIST Standards for O_2....**Error! Bookmark not defined.**
Table 3-11: NIST Standards for SO_2....**Error! Bookmark not defined.**
Table 3-12: NIST Standards for NO....**Error! Bookmark not defined.**
Table 3-13: NIST Standards for Propane (C_3H_8)....**Error! Bookmark not defined.**
Table 3-14: Possible Warning Messages at Start-Up....44
Table 3-15: T700H Default Gas Types....46
Table 3-16: T700H Units of Measure List....53
Table 4-1: T700H Gas Flow Rate Options....57
Table 4-3: Status of Internal Pneumatics During GENERATE → GPT Mode....64
Table 5-1: Test Functions Defined....72
Table 5-2: Calibrator Operating Modes....74
Table 5-3: Status of Internal Pneumatics During STANDBY Mode....74
Table 5-4: Status of Internal Pneumatics During GENERATE Mode....76
Table 5-5: Status of Internal Pneumatics During GENERATE → GPT Mode....87
Table 5-6: Internal Pneumatics During Purge Mode....89
Table 5-7: Automatic Calibration SEQUENCE Set Up Attributes....93
Table 5-8: Calibration SEQUENCE Step Instruction....94
Table 5-9: Sequence Progress Reporting Mode....104
Table 5-10: Password Levels....120
Table 5-11: DIAG – Analog I/O Functions....123
Table 5-12: Test Channels Functions available on the T700H's Analog Output....125
Table 5-13: Analog Output Voltage Range Min/Max....127

Table 5-14: Voltage Tolerances for the TEST CHANNEL Calibration 133
Table 5-15: Variable Names (VARS)....136
Table 6-1: COMM Port Communication Modes 143
Table 6-2: Terminal Mode Software Commands....147
Table 6-3: TAPI Serial I/O Command Types....148
Table 6-4: Ethernet Status Indicators....158
Table 6-5: LAN/Internet Configuration Properties 160
Table 7-1: Examples of MFC Calibration Points 170
Table 7-2: T700H Pressure Sensor Calibration Setup....178
Table 8-1: T700H Maintenance Schedule....184
Table 9-1: Warning Messages in Front Panel Display Param Field....193
Table 9-2: Test Functions – Indicated Failures 194
Table 9-3: Test Channel Outputs as Diagnostic Tools....196
Table 9-4: Relay PCA Watchdog LED Failure Indications 197
Table 9-5: Relay PCA Status LED Failure Indications 198
Table 9-6: Valve Driver Board Watchdog LED Failure Indications 199
Table 9-7: Relay PCA Status LED Failure Indications 199
Table 9-8: DC Power Test Point and Wiring Color Codes 201
Table 9-9: DC Power Supply Acceptable Levels....202
Table 9-10: Relay PCA Control Devices 203
Table 9-11: Analog Output Test Function – Nominal Values Voltage Outputs 206
Table 9-12: Status Outputs Check 207
Table 9-13: T700H Control Input Pin Assignments and Corresponding Signal I/O Functions 208
Table 9-14: Control Outputs Pin Assignments and Corresponding Signal I/O Functions Check 209
Table 10-1: Relay PCA Status LEDs....222

LIST OF APPENDICES

APPENDIX A - VERSION SPECIFIC SOFTWARE DOCUMENTATION

APPENDIX B - T700H SPARE PARTS LIST

APPENDIX C - REPAIR QUESTIONNAIRE - T700H

APPENDIX D - ELECTRONIC SCHEMATICS

This page intentionally left blank.

PART I
–
GENERAL INFORMATION

1. INTRODUCTION

The Model T700H is a microprocessor-controlled calibrator for calibration of precision gas analyzers. Using a combination of highly accurate mass flow controllers and compressed sources of standard gases, diluted calibration gas can be generated for multipoint span and zero checks. Up to four gas sources may be used.

The T700H calibrator is also equipped with a high-level ozone GPT subsystem for generation of NO_2 (nitrogen dioxide) concentrations between 5 and 100 PPM using a bottled source of NO (Nitric Oxide). This feature is used for performing QA checks on medium and high range NOx analyzers (such as the TAPI models T200H and T200M) that are typically used in CEMs (Continuous Emissions Monitoring) systems. The T700H produces NO_2 by blending NO gas with a controlled concentration of ozone from a precision high-level ozone source. A multi-point linearization curve is used to control the ozone generator to assure repeatable ozone concentrations.

As many as 50 independent calibration sequences may be programmed into the T700H, covering time periods of up to one year. The setup of sequences is simple and intuitive. These sequences may be actuated manually, automatically, or by a remote signal. The sequences may be uploaded remotely, including remote editing. All user programmed sequences are maintained in non-volatile memory.

The T700H design emphasizes fast response, repeatability, overall accuracy and ease of operation. It may be combined with the M701 Zero Air Generator to provide the ultimate in easy to use, precise calibration for your gas calibrators.

Some of the exceptional features of your T700H Source Monitoring Dilution Calibrator are:

- Advanced T-Series electronics
- LCD color graphics display with touch screen interface
- Microprocessor control for versatility
- Bi-directional USB (optional), RS-232, optional RS-485, and 10/100 Base-T Ethernet for remote operation
- Precise calibration gas generation for NO, NO2, CO, HC, H2S, SO2, and other user-defined gases
- 12 independent timers for sequences
- Nested sequences (up to 5 levels)
- Software linearization of Mass Flow Controllers (MFC)
- 4 calibration gas ports configurable for single or multi-blend gases
- Optional 3rd MFC for wide dynamic range
- Multi-blending gases (dual cal gas blending)

This page intentionally left blank.

2. SPECIFICATIONS AND APPROVALS

2.1. SPECIFICATIONS

Table 2-1: T700H Dilution System Specifications

Parameter	Specification	
Flow Measurement Accuracy	±1.0% of Full Scale	
Repeatability of Flow Control	±0.2% of Full Scale	
Linearity of Flow Measurement	±0.5% of Full Scale	
Flow Range of Diluent Air	0 to 10 SLPM – Optional Ranges: 0 to 5 SLPM; 0 to 20 SLPM	
Flow Range of Cylinder Gases	0 to 100 cc/min – Optional Ranges: 0 to 50 cc/min; 0 to 2000 cc/min	
Zero Air Required	10 SLPM @ 30 PSIG Optional: 20 SLPM @ 30 PSIG	
CAL Gas Input Ports	4 (configurable)	
Diluent Gas Input Ports	1	
Response Time	60 Seconds (98%)	
AC Power	Rating 100-240V~ 50/60Hz 1.5A	Typical Power Consumption 28 W at 115 V; 35 W at 230 V
Analog Outputs	1 user configurable output	
Analog Output Ranges (Test Channel)	10V, 5V, 1V, 0.1V (selectable) Range with 5% under/over-range	
Analog Output Resolution	1 part in 4096 of selected full-scale voltage (12 bit)	
Standard I/O	1 Ethernet: 10/100Base-T 2 RS-232 (300 – 115,200 baud) 2 USB device ports 8 opto-isolated digital control outputs 12 opto-isolated digital control inputs 8 opto-isolated digital status outputs	
Optional I/O	1 USB com port 1 RS485 Multidrop RS232	
Operating Temperature Range	5-40ºC	
Humidity Range	0 - 95% RH, non-condensing	
Environmental Conditions	Installation Category (Over Voltage Category) II Pollution Degree 2 Intended for Indoor Use Only at Altitudes ≤ 2000m	
Materials	Cal Gas Output Wetted Materials: Stainless Steel, PTFE and FEP Teflon, Glass-coated Steel	
Dimensions (H x W x D)	7” x 17” x 24” (178 mm x 432 mm x 609 mm)	
Weight	39.3 lbs (17.8 kg) with all options	

Table 2-2: T700H Specifications for Ozone Generator

Parameter	Specification	
	Minimum	**Maximum**
O3 Concentration	5 ppm	150 ppm
Output	5 ppm ▪ LPM	400 ppm ▪ LPM
Response Time	240 seconds to 98%	

2.2. APPROVALS AND CERTIFICATIONS

2.2.1. SAFETY

IEC/EN 61010-1:2010 (3rd Edition), Safety requirements for electrical equipment for measurement, control and laboratory use.

CE: 2006/95/EC, Low-Voltage Directive

2.2.2. EMC

IEC/EN 61326-1, Class A Emissions/Industrial Immunity

EN55011 (CISPR 11), Group 1, Class A Emissions

FCC 47 CFR Part 15B, Class A Emissions

CE: 2004/108/EC, Electromagnetic Compatibility Directive

3. GETTING STARTED

3.1. UNPACKING AND INITIAL SETUP

CAUTION – RISK of Personal Injury

THE T700H WEIGHS ABOUT 18 KG (39 POUNDS). TO AVOID PERSONAL INJURY, WE RECOMMEND USING TWO PERSONS TO LIFT AND CARRY THE CALIBRATOR.

CAUTION – Avoid Warranty Invalidation

Printed circuit assemblies (PCAs) are sensitive to electro-static discharges (ESD) too small to be felt by the human nervous system. Damage resulting from failure to use ESD protection when working with electronic assemblies will void the instrument warranty.

For more information on preventing ESD damage, see *A Primer on Electro-Static Discharge* our website at http://www.teledyne-api.com under Help Center > Product Manuals in the Special Manuals section.

CAUTION – Avoid Damage to the Instrument

Do not operate the instrument without first removing dust plugs from pneumatic ports and from the top of the desiccant dryer on rear panel.

Note

It is recommended that you store shipping containers/materials for future use if/when the instrument should be returned to the factory for repair and/or calibration service. See Warranty section in this manual and shipping procedures on our Website at http://www.teledyne-api.com under Customer Support > Return Authorization.

WARNING! ELECTRICAL SHOCK HAZARD

NEVER DISCONNECT ELECTRONIC CIRCUIT BOARDS, WIRING HARNESSES OR ELECTRONIC SUBASSEMBLIES WHILE THE UNIT IS UNDER POWER.

1. Inspect the received packages for external shipping damage. If damaged, please advise the shipper first, then Teledyne API.
2. Included with your calibrator is a printed record of the final performance characterization performed on your instrument at the factory. This record, titled Final Test and Validation Data Sheet is an important quality assurance and calibration record for this instrument. It should be placed in the quality records file for this instrument.

3. Carefully remove the top cover of the calibrator and check for internal shipping damage.

- Remove the locking screw located in the top, center of the Front panel.
- Remove the two screws fastening the top cover to the unit (one per side towards the rear).
- Slide the cover backwards until it clears the calibrator's front bezel.
- Lift the cover straight up.

4. Inspect the interior of the instrument to ensure all circuit boards and other components are in good shape and properly seated.
5. Check the connectors of the various internal wiring harnesses and pneumatic hoses to ensure they are firmly and properly seated.
6. Verify that all of the optional hardware ordered with the unit has been installed. These are checked on the paperwork accompanying the calibrator.

VENTILATION CLEARANCE: Whether the calibrator is set up on a bench or installed into an instrument rack, be sure to leave sufficient ventilation clearance.

AREA	MINIMUM REQUIRED CLEARANCE
Back of the instrument	10 cm / 4 inches
Sides of the instrument	2.5 cm / 1 inch
Above and below the instrument.	2.5 cm / 1 inch

Various rack mount kits are available for this calibrator. See Section 4 of this manual for more information.

3.1.1. CALIBRATOR LAYOUT

Figure 3-1 shows the calibrator's front panel layout, followed by a close-up of the display/touchscreen in Figure 3-2 and description in Table 3 1. The two USB ports on the front panel are provided for the connection of peripheral devices:

- plug-in mouse (not included) to be used as an alternative to the touchscreen interface
- thumb drive (not included) to upload new software (contact TAPI Technical Support for information).

3.1.1.1. Front Panel

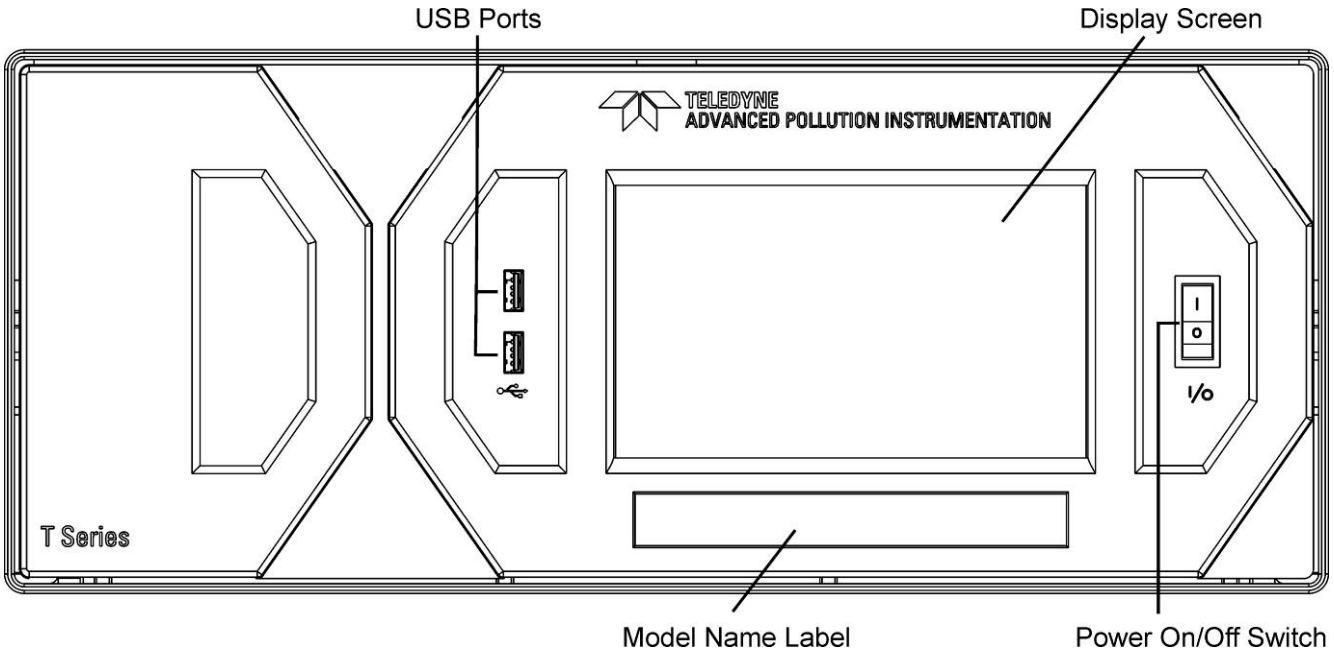

Figure 3-1: T700H Front Panel Layout

Figure 3-2: Display Screen and Touch Control

The front panel liquid crystal display (LCD) screen includes touch control. Upon calibrator start-up, the LCD shows a splash screen and other initialization indicators before the main display appears, similar to Figure 3-2 above.

CAUTION – Avoid Damaging Touchscreen
Do not use hard-surfaced instruments such as pens to operate the touch screen buttons.

Table 3-1: Display Screen and Touch Control Description

Field	Description/Function			
LEDs indicating the states of the calibrator:				
Status	Name	Color	State	Definition
	Active	Green	off	Unit is operating in STANDBY mode. This LED is lit when the instrument is actively producing calibration gas (GENERATE mode).
	Auto Timer	Yellow	off	This LED is lit only when the calibrator is performing an automatic calibration sequence.
	Fault	Red	blinking	The calibrator is warming up and therefore many of its subsystems are not yet operating within their optimum ranges. Various warning messages may appear in the Param field.
Target/ Actual	Gas concentrations, Cal gas MFC and Diluent MFC values with unit of measure			
Mode	Displays the name of the calibrator's current operating mode (default is STANDBY at initial startup).			
Param	Displays a variety of informational messages such as warning messages, operational data, test function values and response messages during interactive tasks.			
Touchscreen control: row of eight buttons with dynamic, context sensitive labels; buttons are blank when inactive/inapplicable.				

Figure 3-3 shows how the front panel display is mapped to the menu charts that are illustrated throughout this manual. The Mode, Param (parameters), and Target/Actual (gas concentration) fields in the display screen are represented across the top row of each menu chart. The eight touch control buttons along the bottom of the display screen are represented in the bottom row of each menu chart.

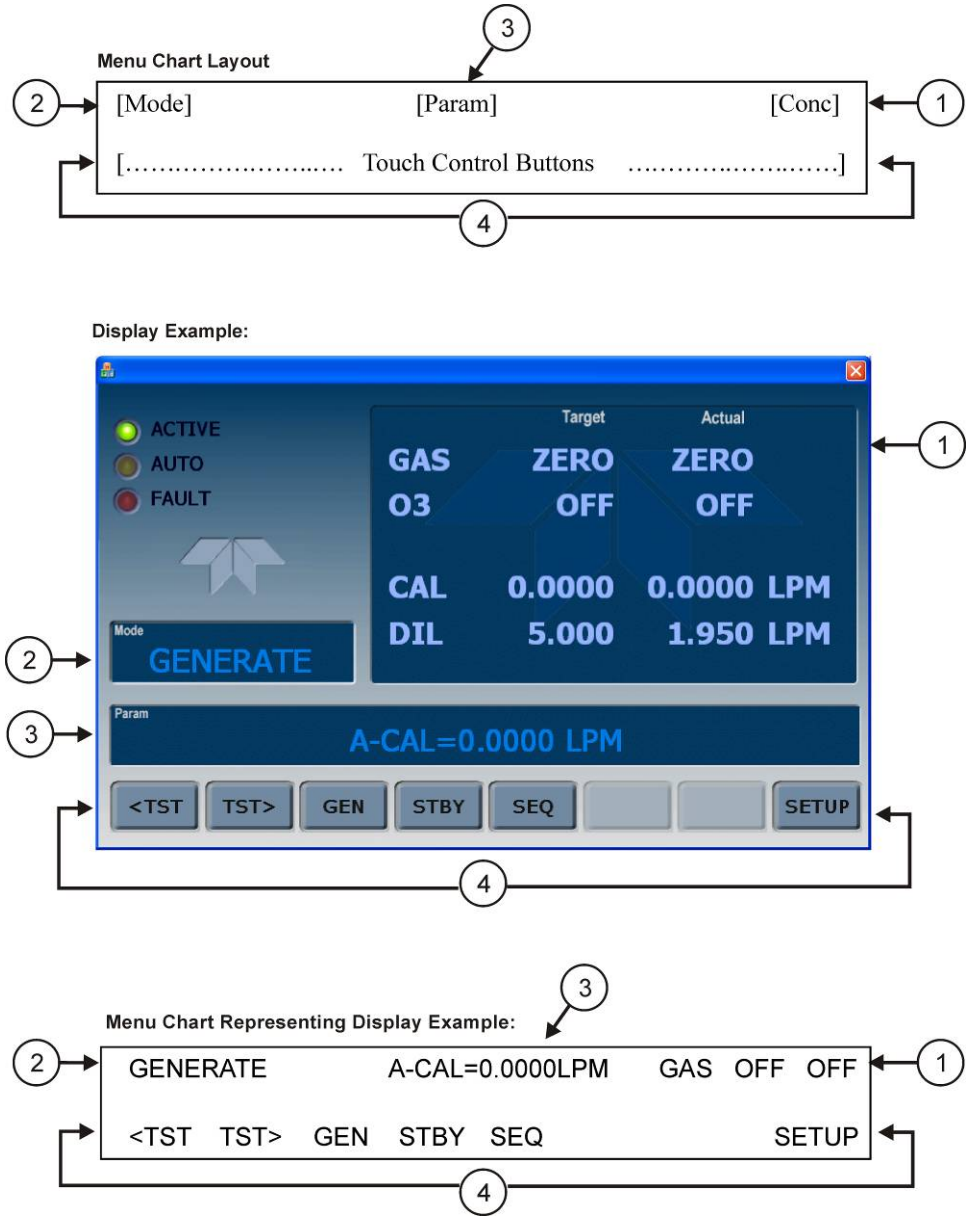

Figure 3-3: Display/Touch Control Screen Mapped to Menu Charts

3.1.1.2. Rear Panel

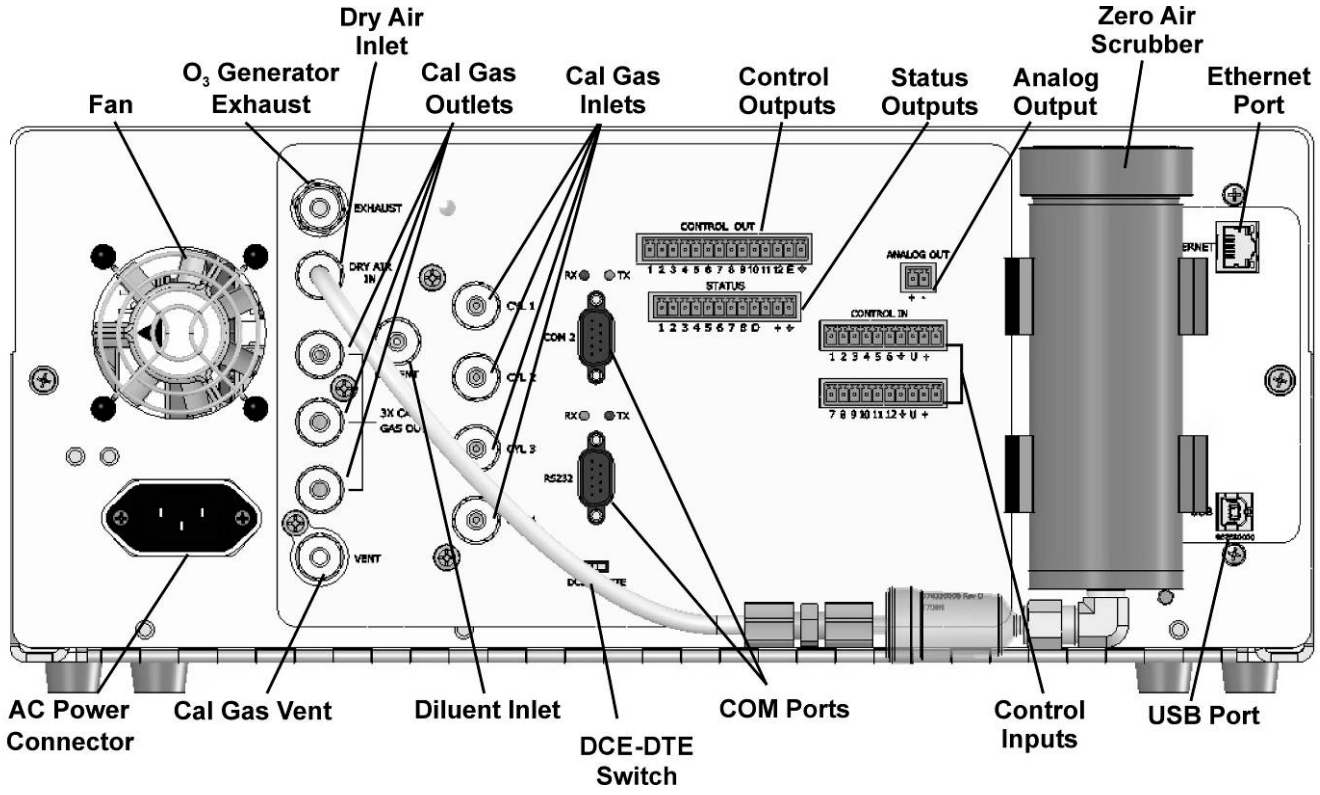

Figure 3-4: Rear Panel

Table 3-2 provides a description of each component on the rear panel.

Table 3-2: Rear Panel Description

Component	Function
Fan	Cools instrument: pulls ambient air into chassis through side vents and exhausts through rear.
AC Power Connector	Connector for three-prong cord to apply AC power to the analyzer **CAUTION! The cord's power specifications (specs) MUST comply with the power specs on the calibrator's rear panel Model number label.**
EXHAUST	Exhaust gas from ozone generator . **CAUTION! Exhaust gas must be vented outside.**
DILUENT IN	Diluent or zero air gas inlet
DRY AIR INLET	For air from desiccant dryer
CALGAS OUT	Manifold Outlets for calibration gas
VENT	Vent port for output manifold
CYL 1 thru CYL 4	Inlets for up to 4 calibration gases
COM 2	Serial communications port for RS-232 or RS-485
RX TX	LEDs to indicate receive (RX) and transmit (TX) activity on the COM ports when blinking
RS-232	Serial communications port for RS-232 only
DCE DTE	Switch to select either data terminal equipment or data communication equipment during RS-232 communication
CONTROL OUT	For outputs to devices such as Programmable Logic Controllers (PLCs).
STATUS	For outputs to devices such as Programmable Logic Controllers (PLCs).
ANALOG OUT	For voltage output to a strip chart recorder and/or a data logger
CONTROL IN	For remotely activating the zero and span calibration modes
ETHERNET	Connector for network or Internet remote communication, using Ethernet cable
Desiccant Dryer	To remove moisture from air
(optional) USB	Connector for direct connection to a personal computer, using USB cable
Manufacturing Label	Identifies the instrument model number and lists voltage and frequency specifications

3.1.1.3. Internal Layout

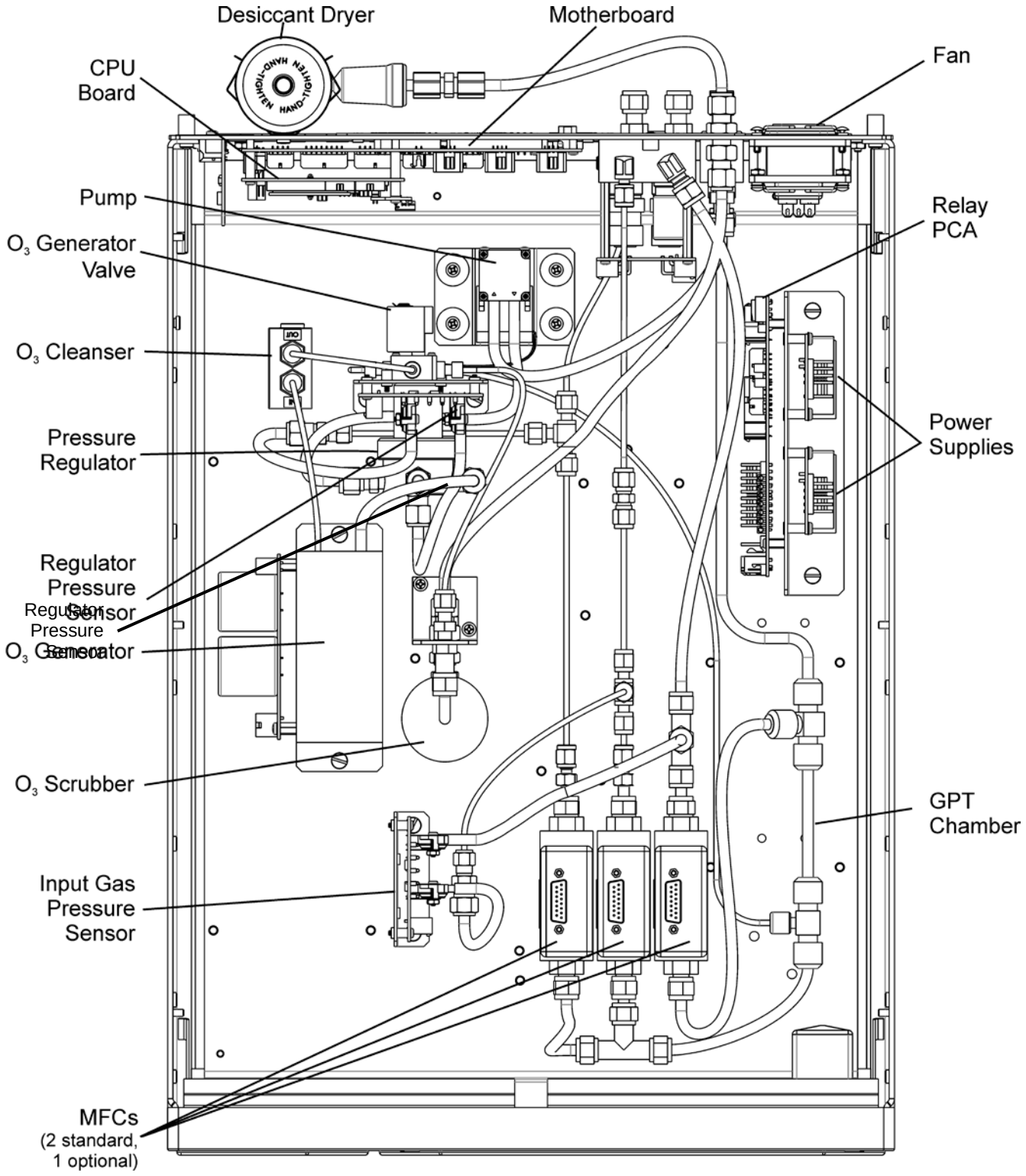

Figure 3-5: T700H Internal Layout – Top View

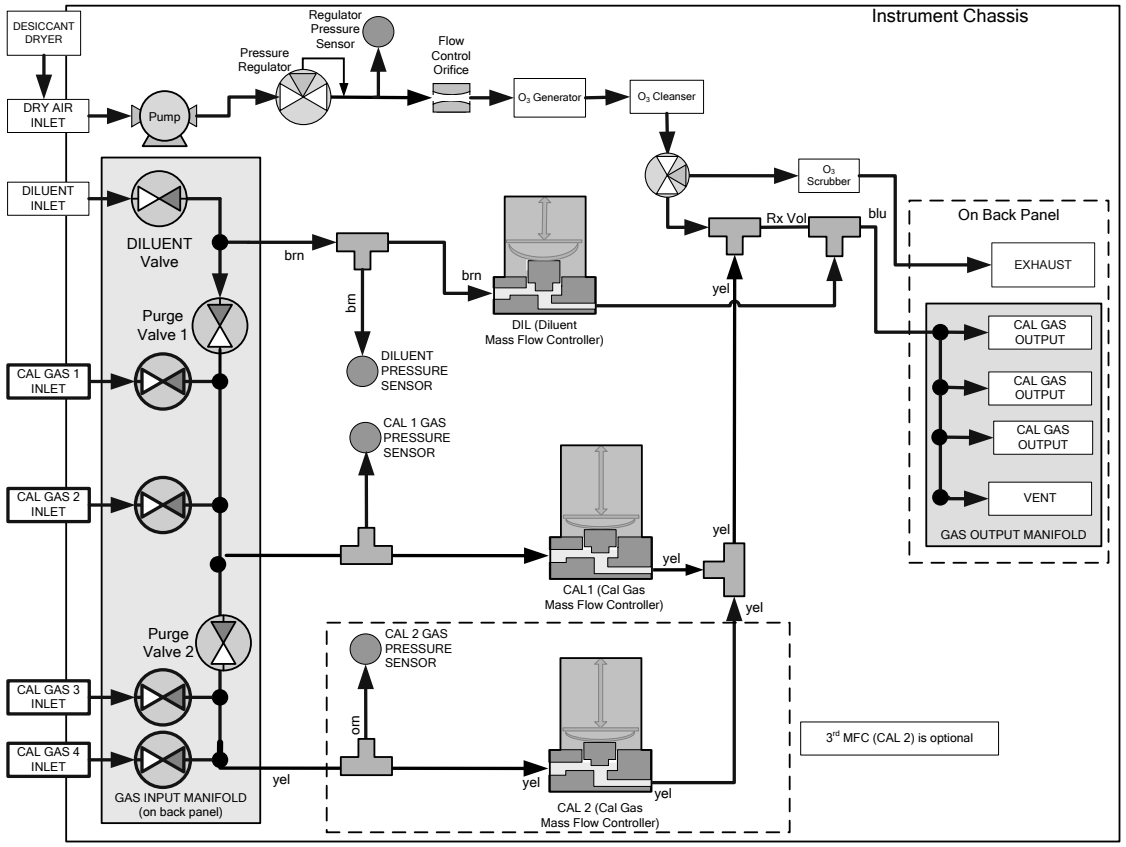

Figure 3-6: T700H Pneumatic Diagram

3.1.2. ELECTRICAL CONNECTIONS

NOTE

To maintain compliance with EMC standards, it is required that the cable length be no greater than 3 meters for all I/O connections, which include Analog In, Analog Out, Status Out, Control In, Ethernet/LAN, USB, RS-232, and RS-485.

3.1.2.1. Power Connection

Attach the power cord to the calibrator and plug it into a power outlet capable of carrying at least 10 A current at your AC voltage and that it is equipped with a functioning earth ground.

WARNING

HIGH VOLTAGES ARE PRESENT INSIDE THE CALIBRATORS CASE.

POWER CONNECTION MUST HAVE FUNCTIONING GROUND CONNECTION.

DO NOT DEFEAT THE GROUND WIRE ON POWER PLUG.

TURN OFF CALIBRATOR POWER BEFORE DISCONNECTING OR CONNECTING ELECTRICAL SUBASSEMBLIES.

DO NOT OPERATE WITH COVER OFF.

NOTE

The T700H calibrator is equipped with a universal power supply that allows it to accept any AC power configuration, within the limits specified in Table 2-2.

3.1.2.2. Analog Output Connections

The T700H is equipped with an analog output channel accessible through a connector on the back panel of the instrument. The standard configuration for this output is 0-5 VDC. It can be set by the user to output one of a variety of diagnostic test functions (see Section 5.9.1.2).

To access these signals attach a strip chart recorder and/or data-logger to the appropriate analog output connections on the rear panel of the calibrator.

Pin-outs for the analog output connector at the rear panel of the instrument are:

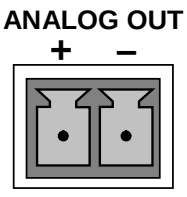

Figure 3-7: T700H Analog Output Connector

3.1.2.3. Connecting the Status Outputs

The status outputs report calibrator conditions via optically isolated NPN transistors, which sink up to 50 mA of DC current. These outputs can be used to interface with devices that accept logic-level digital inputs, such as Programmable Logic Controllers (PLCs). Each Status bit is an open collector output that can withstand up to 40 VDC. All of the emitters of these transistors are tied together and available at D.

NOTE

Most PLCs have internal provisions for limiting the current that the input will draw from an external device. When connecting to a unit that does not have this feature, an external dropping resistor must be used to limit the current through the transistor output to less than 50 mA. At 50 mA, the transistor will drop approximately 1.2V from its collector to emitter.

The status outputs are accessed via a 12-pin connector on the calibrator's rear panel labeled STATUS. The function of each pin is defined in Table 3-3.

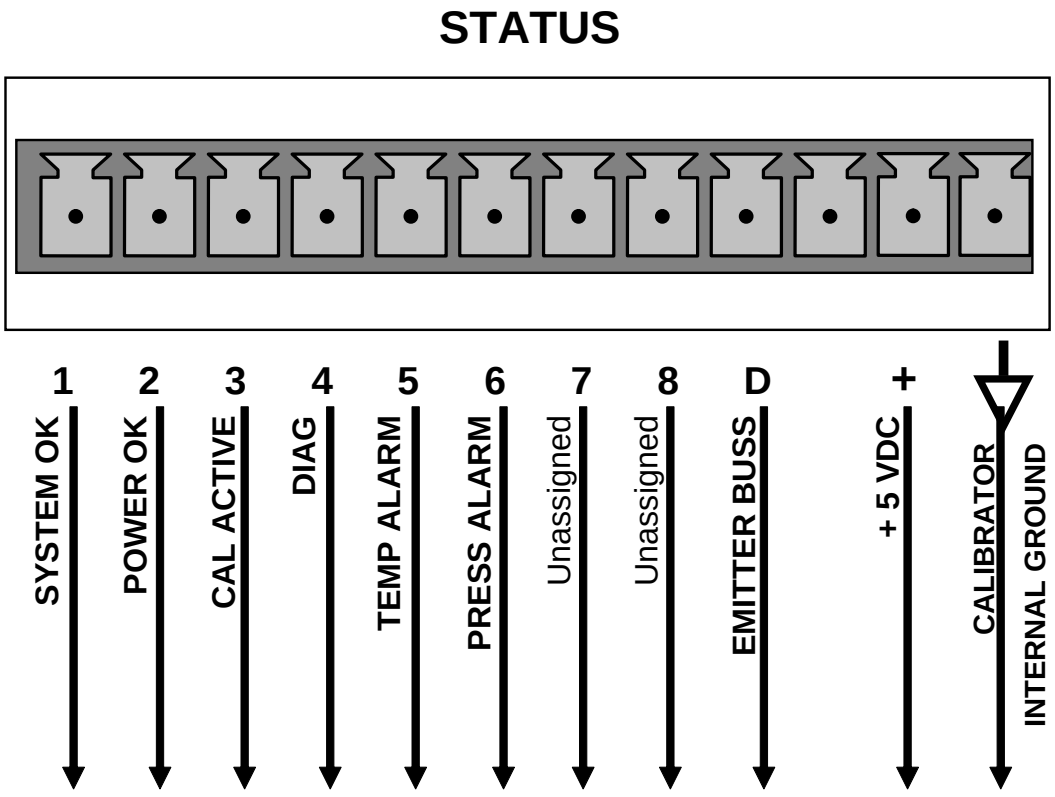

Figure 3-8: Status Output Connector

The pin assignments for the Status Outputs are:

Table 3-3: Status Output Pin Assignments

OUTPUT #	STATUS DEFINITION	CONDITION
1	**SYSTEM OK**	On if no faults are present.
2	**POWER OK**	On if no faults are present.
3	**CAL ACTIVE**	On if the calibrator is in **GENERATE** mode.
4	**DIAG**	On if the calibrator is in **DIAGNOSTIC** mode.
5	**TEMP ALARM**	On whenever a temperature alarm is active.
6	**PRESS ALARM**	On whenever gas pressure alarm is active.
7 & 8	Unassigned	
D	Emitter BUS	The emitters of the transistors on pins 1 to 8 are bussed together.
⏚	Digital Ground	The ground level from the calibrator's internal DC power supplies.
D	Emitter BUS	The emitters of the transistors on pins 9 to 16 are bussed together.
+	DC POWER	+ 5 VDC

3.1.2.4. Connecting the Control Inputs

The calibrator is equipped with 12 digital control inputs that can be used to initiate various user programmable calibration sequences (see Section 5.5.1.5 for instructions on assigning the control inputs to specific calibration sequences).

Access to these inputs is via two separate 10-pin connectors, labeled CONTROL IN, that are located on the calibrator's rear panel.

Table 3-4: T700H Control Input Pin Assignments

CONNECTOR	INPUT	DESCRIPTION
Top	**1 to 6**	Can be used as either 6, separate on/off switches or as bits 1 through 6 of a 12-bit wide binary activation code.
Bottom	**7 to 12**	Can be used as either 6, separate on/off switches or as bits 7 through 12 of a 12-bit wide binary activation code.
BOTH	⏚	Chassis ground.
Top	**U**	Input pin for +5 VDC required to activate pins 1 – 6. This can be from an external source or from the "+" pin of the connector.
Bottom	**U**	Input pin for +5 VDC required to activate pins 7 – 12. This can be from an external source or from the "+" pin of the connector.
BOTH	**+**	Internal source of +5V used to actuate control inputs when connected to the U pin.

There are two methods for energizing the control inputs. The internal +5V available from the pin labeled "+" is the most convenient method. However, if full isolation is required, an external 5 VDC power supply should be used.

Example of Local Power Connections

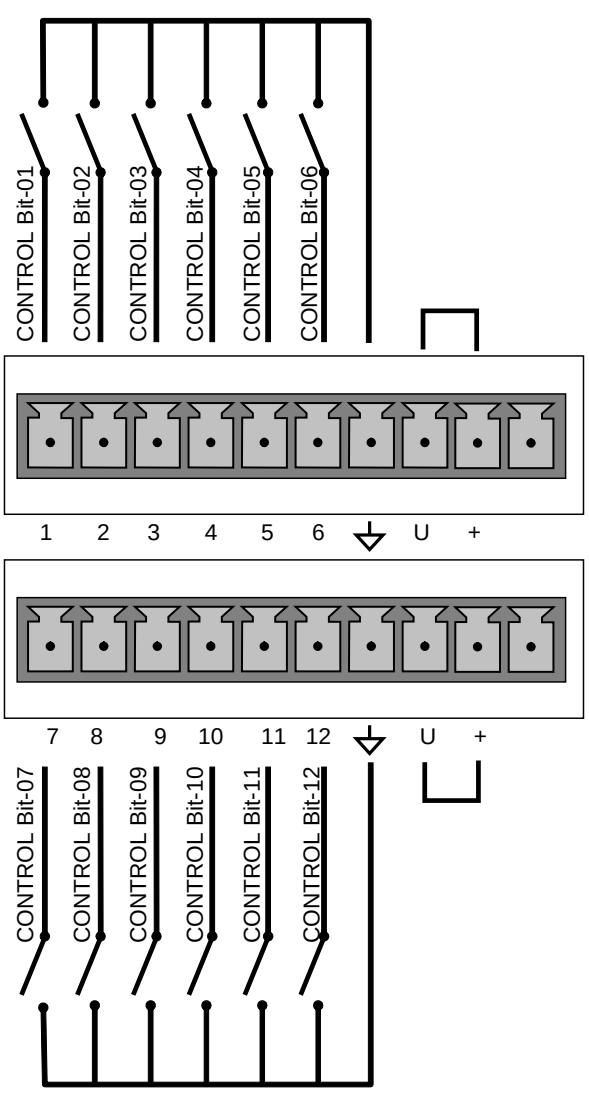

Example of External Power Connections

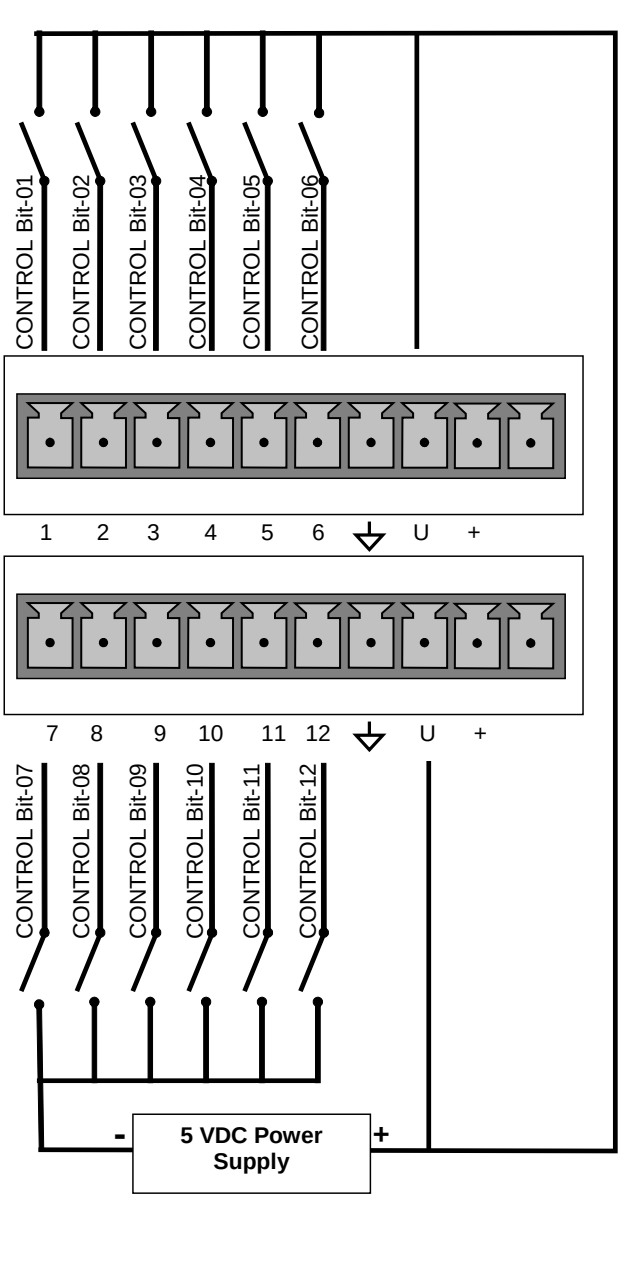

Figure 3-9: T700H Digital Control Input Connectors

3.1.2.5. Connecting the Control Outputs

The calibrator is equipped with 12 opto-isolated, digital control outputs. These outputs are activated by the T700H's user-programmable; calibration sequences (see Sections 5.5.1.6 and 5.5.2.8 for instructions on assigning the control inputs to specific calibration sequences)

These outputs may be used to interface with devices that accept logic-level digital inputs, such as Programmable Logic Controllers (PLCs), data loggers, or digital relays/valve drivers.

They are accessed via a 14-pin connector on the calibrator's rear panel (see Figure 3-10).

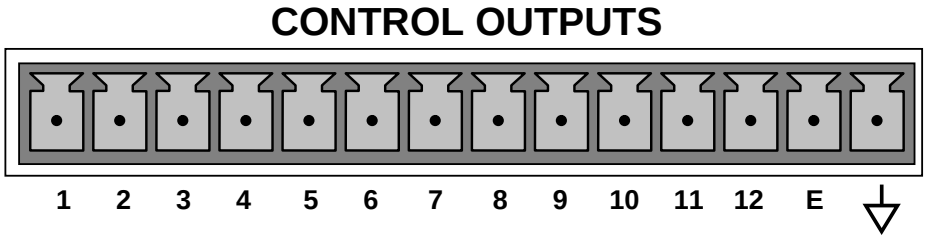

Figure 3-10: T700H Digital Control Output Connector

NOTE

Most PLCs have internal provisions for limiting the current the input will draw. When connecting to a unit that does not have this feature, external resistors must be used to limit the current through the individual transistor outputs to ≤50mA (120 Ω for 5V supply).

The pin assignments for the control outputs are:

Table 3-5: T700H Control Output Pin Assignments

PIN #	STATUS DEFINITION	CONDITION
1 - 12	Outputs 1 through 12 respectively	Closed if the sequence or sequence step activating output is operating
E	Emitter BUS	The emitters of the transistors on pins 1 to 8 are bussed together.
⏚	Digital Ground	The ground level from the calibrator's internal DC power supplies.

3.1.2.6. Connecting the Serial Ports

For RS-232 communications through the serial interface COMM ports, refer to Section 4.4.1 of this manual for instructions on configuration and usage. For RS-485 communication, contact the factory.

3.1.2.7. Connecting to a LAN or the Internet

For network or Internet communication with the calibrator connect an Ethernet cable (TAPI Option 60C) from the Ethernet port on the rear panel to any nearby Ethernet access port.

NOTE

The T700H firmware supports dynamic IP addressing or DHCP (default setup) for remote operation via an Ethernet connection). If your network also supports DHCP, the calibrator will automatically configure its LAN connection appropriately (see Sections 6.1, 6.4 and 6.5.1).

If your network does not support DHCP, or to establish a permanent Ethernet connection, see Section 6.5.1.1 for instructions on manually configuring the connection with a static IP address.

3.1.2.8. Connecting to a Personal Computer (USB Option)

For direct communication between the analyzer and a personal computer (PC), connect a USB cable between the analyzer and desktop or laptop USB ports. (If this option is installed, the COM2 port can only be used for RS232 multidrop communication). This connection requires downloading a USB driver from the TAPI website (Section 6.4).

3.1.2.9. Connecting to a Multi-drop Network

If your unit has a TAPI's RS-232 multi-drop card (Option 62), see Section 6.2.1 for setup instructions.

3.2. PNEUMATIC CONNECTIONS

CAUTION!

Do not operate this instrument until you've removed dust plugs from inlet and outlet/exhaust ports on the rear panel!

CAUTION!

Do not over- or under-tighten pneumatic fittings! There is a separate torque guideline for new fittings vs existing fittings that are being reattached:

New fittings: Insert tubing into the fitting, ensuring that the tube rests firmly on the fitting shoulder and that the nut is finger tight. Then tighten according to size of the nut:
¼" and larger: 1 ¼ turns
$^{3}/_{16}$" and smaller: ¾ of a turn.

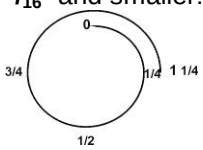

Reassembly: *Before disconnecting*, mark the position of the nut in relation to the fitting body. To reconnect, use a wrench to gently tighten the nut to the point where the markings match just as you feel a slight rise in torque.

3.2.1. ABOUT DILUENT GAS

- For CEMS and other systems using high level NOx analyzers, nitrogen is typically used as the diluent gas when performing analyzer calibrations.
- Diluent gas should be dry (< -20ºC of Dew Point).
- Diluent gas should be supplied at a gas pressure of between 25 PSI and 35 PSI with a flow greater than the flow rate for the calibrator. For the standard unit this means greater than 10 SLPM.
- For calibrators with the 20 LPM diluent flow option (OPT) the diluent gas should be supplied at a gas pressure of between 30 PSI and 35 PSI.

Zero Air can be purchased in pressurized canisters or created using a TAPI's Model 701 Zero Air Generator.

3.2.2. ABOUT CALIBRATION GAS

Calibration gas is a gas specifically mixed to match the chemical composition of the type of gas being measured. Usually it is a single gas type mixed with N_2 although bottles containing multiple mixtures of compatible gases are also available (e.g. H_2S, O_2 and CO mixed with N_2).

- Calibration gas should be supplied at a pressure of between 25 PSI and 35 PSI with a flow capacity greater than the maximum cal gas MFC range for the calibrator.

3.2.2.1. NIST Traceable Calibration Gas Standards

All calibration gases should be verified against standards of the National Institute for Standards and Technology (NIST). To ensure NIST traceability, we recommend acquiring cylinders of working gas that are certified to be traceable to NIST Standard Reference Materials (SRM). These are available from a variety of commercial sources.

3.2.2.2. Minimum Calibration Gas Source Concentration

Determining minimum Cal Gas Concentration to determine the minimum concentration of a calibration gas required by your system:

1. Determine the Total Flow required by your system by adding the gas flow requirement of each of the analyzers in the system.
2. Multiply this by 1.5.
3. Decide on a Calibration Gas flow rate.
4. Determine the Calibration Gas ratio by divide the Total Flow by the Calibration Gas Flow Rate.
5. Multiply the desired target calibration gas concentration by the result from step 4.

EXAMPLE: Your system has two analyzers each requiring 2SLPM of cal gas flow.

2SLPM + 2SLPM = 4SLPM

4SLPM x 1.5 = 6SLPM = Total Gas Flow Rate

If you set your T700H calibrator so that the cal gas flow rate is 2SLPM (therefore the Diluent Flow Rate would need to be set at 4 SLPM) the Calibration Gas ratio would be:

6SLPMm ÷ 2SLPM = 3:1

Therefore if your Target Calibration Gas Concentration is intended to be 200 ppm, the minimum required source gas concentration for this system operating at these flow rates would be:

3 x 200ppm = 600 ppm

3.2.3. CONNECTING DILUENT GAS TO THE CALIBRATOR

1. Attach the diluents' source line (Nitrogen) to the port labeled **DILUENT IN**.
2. Use the fittings provided with the calibrator to connect the diluents' source line.

- Adhere to assembly/reassembly guidelines for proper torque, provided at the beginning of Section 3.2.

3.2.4. CONNECTING CALIBRATION SOURCE GAS TO THE T700H CALIBRATOR

Connect the source gas line(s) to the ports labeled **CYL1** through **CYL4** on the back of the calibrator (refer to Figure 3-4).

- Source gas delivery pressure should be regulated between 25 PSI to 30 PSI.
- Use stainless steel tubing with a 1/8 inch outer diameter.

3.2.5. CONNECTING GAS OUTPUTS FROM THE CALIBRATOR

3.2.5.1. Set up for Direct Connections to Other Instruments

Use this setup if you are connecting the T700H calibrator directly to other instruments without the use of any shared manifolds.

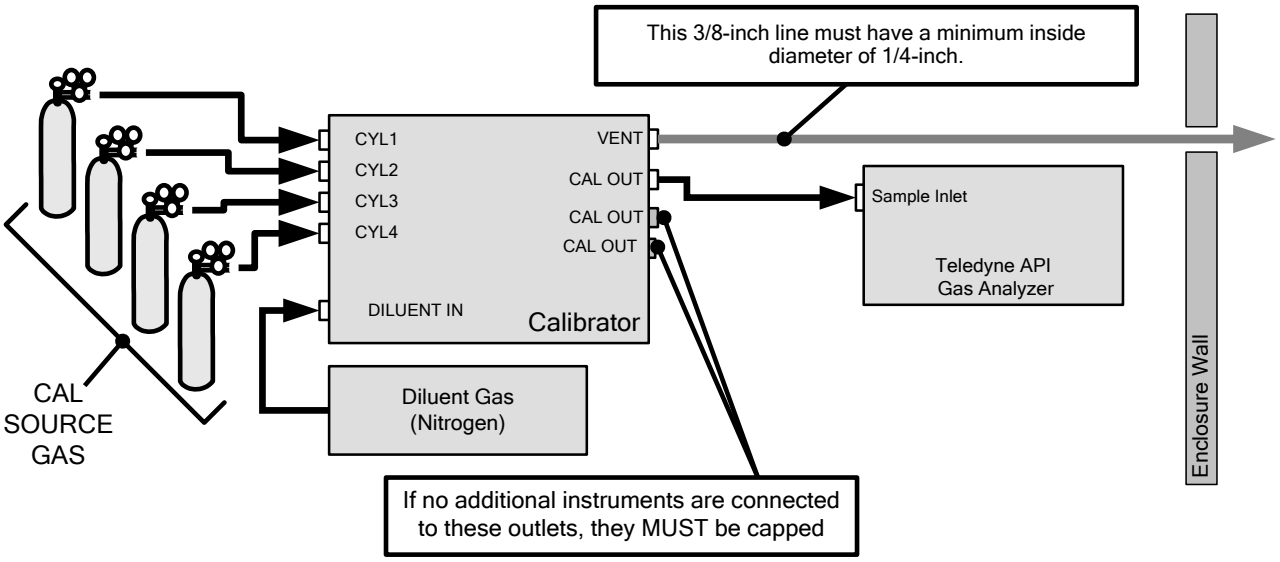

Figure 3-11: Set up for T700H – Connecting the Basic T700H to a Sample Manifold

Ensure that the vent line has a minimum internal diameter of 1/4 inch.

3.2.6. EXHAUST CONNECTION

NOTE

The EXHAUST line must be vented to atmospheric pressure using maximum of 10 meters of ¼" ID PTEF tubing.

Venting must be outside the shelter or immediate area surrounding the instrument.

3.3. INITIAL OPERATION

If you are unfamiliar with the T700H theory of operation, we recommend that you read Section 10.

For information on navigating the calibrator's software menus, see the menu trees described in Appendix A.1.

3.3.1. START UP

After all of the electrical and pneumatic connections are made, turn on the instrument. The exhaust fan and should start immediately.

The front panel display will show a splash screen and other information during the initialization process while the CPU loads the operating system, the firmware and the configuration data.

Once the CPU has completed this activity, it will begin loading the calibrator firmware and configuration data. During this process, model and software revision information appear briefly in the Param field of the calibrator's front panel display before the firmware is fully booted:

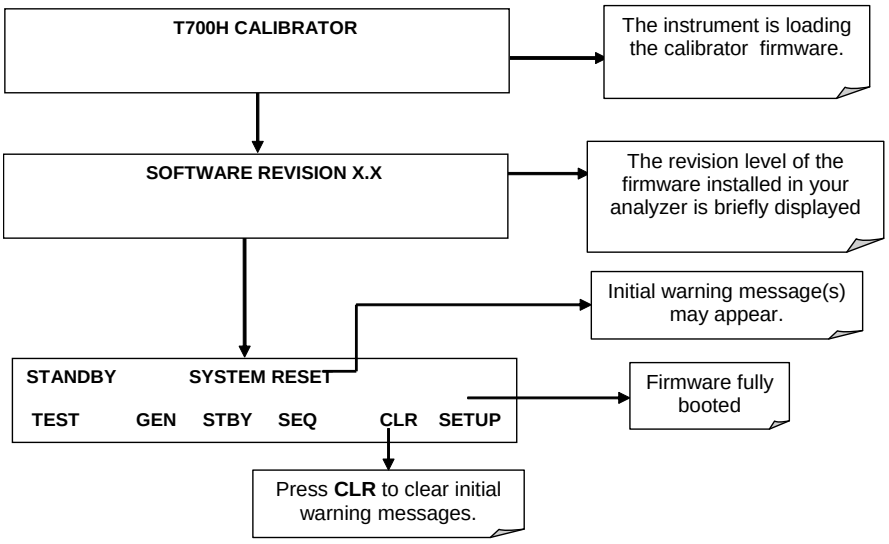

The calibrator should automatically switch to **STANDBY** mode after completing the brief boot-up sequence.

3.3.2. WARM UP

The T700H Source Monitoring dilution calibrator requires a minimum of 30 minutes for all of its internal components to reach a stable operating temperature. During the warm-up period, the front panel display may show messages in the parameters (Param) field.

3.3.3. WARNING MESSAGES

Because internal temperatures and other conditions may be outside be specified limits during the calibrator's warm-up period, the software will suppress most warning

conditions for 30 minutes after power up. If warning messages persist after the 30 minutes warm up period is over, investigate their cause using the troubleshooting guidelines in Section 9 of this manual.

To view and clear warning messages, press:

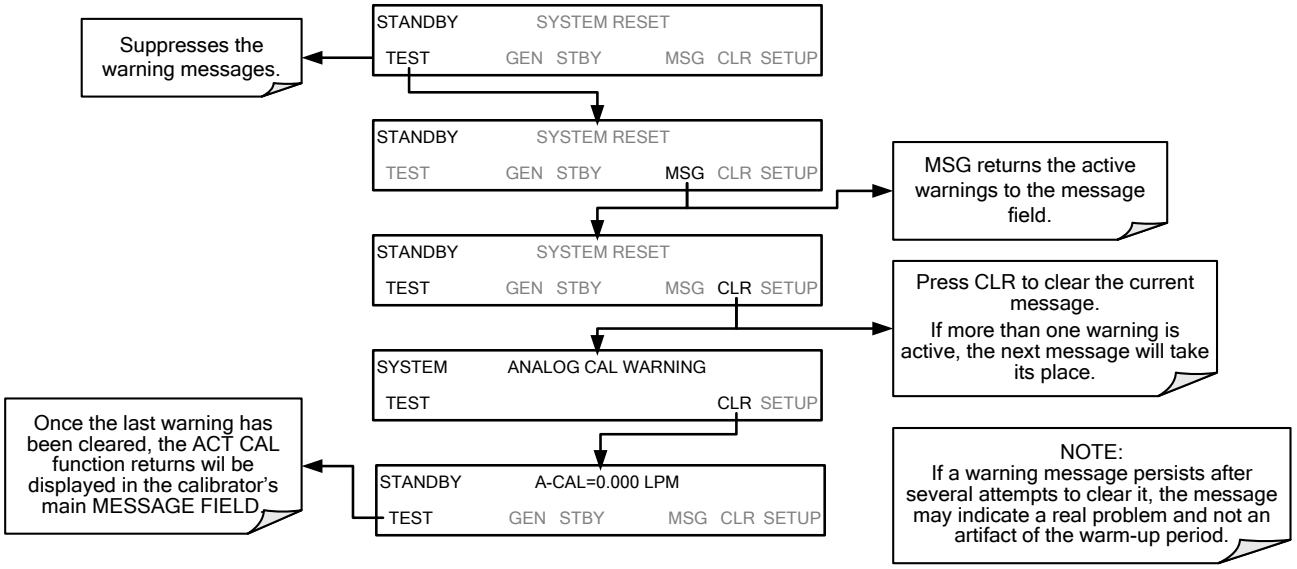

Table 3-6 lists brief descriptions of the warning messages that may occur during start up.

Table 3-6: Possible Warning Messages at Start-Up

MESSAGE	MEANING
ANALOG CAL WARNING	The calibrator's A/D converter or at least one analog input channel has not been calibrated.
CONFIG INITIALIZED	Stored Configuration information has been reset to the factory settings or has been erased.
DATA INITIALIZED	The calibrator's data storage was erased.
MFC FLOW WARNING[1]	One of the calibrator's mass flow controllers is being driven at less than 10% of full scale or greater than full scale.
MFC PRESSURE WARNING	One of the calibrator's mass flow controllers internal gas pressure is outside of allowable limits.
REAR BOARD NOT DET	The calibrator's motherboard was not detected during power up. - This warning only appears for Serial I/O COMM Port(s). - The Front Panel Display will be frozen, blank or will not respond.
REGULATOR PRESSURE WARNING	The gas pressure regulator associated with the internal O_3 generator is reporting a pressure outside of allowable limits.
RELAY BOARD WARN	The firmware is unable to communicate with the calibrator's relay PCA.
SYSTEM RESET	The calibrator has been turned off and on or the CPU was reset.
VALVE BOARD WARN	The firmware is unable to communicate with the valve controller board.

[1] On instrument with multiple Cal Gas MFCs installed, the **MFC FLOW WARNING** occurs when the flow rate requested is <10% of the range of the lowest rated MFC (i.e. all of the cal gas MFC are turned off).

3.3.4. FUNCTIONAL CHECK

1. After the calibrator's components have warmed up for at least 30 minutes, verify that the software properly supports any hardware options that are installed.
2. Check to ensure that the calibrator is functioning within allowable operating parameters. Appendix C includes a list of test functions viewable from the calibrator's front panel as well as their expected values. These functions are also useful tools for diagnosing problems with your calibrator (Section 9.1.2). The enclosed Final Test and Validation Data sheet (P/N 05731) lists these values before the instrument left the factory.

   To view the current values of these parameters press the following button sequence on the calibrator's front panel. Remember until the unit has completed its warm up these parameters may not have stabilized.

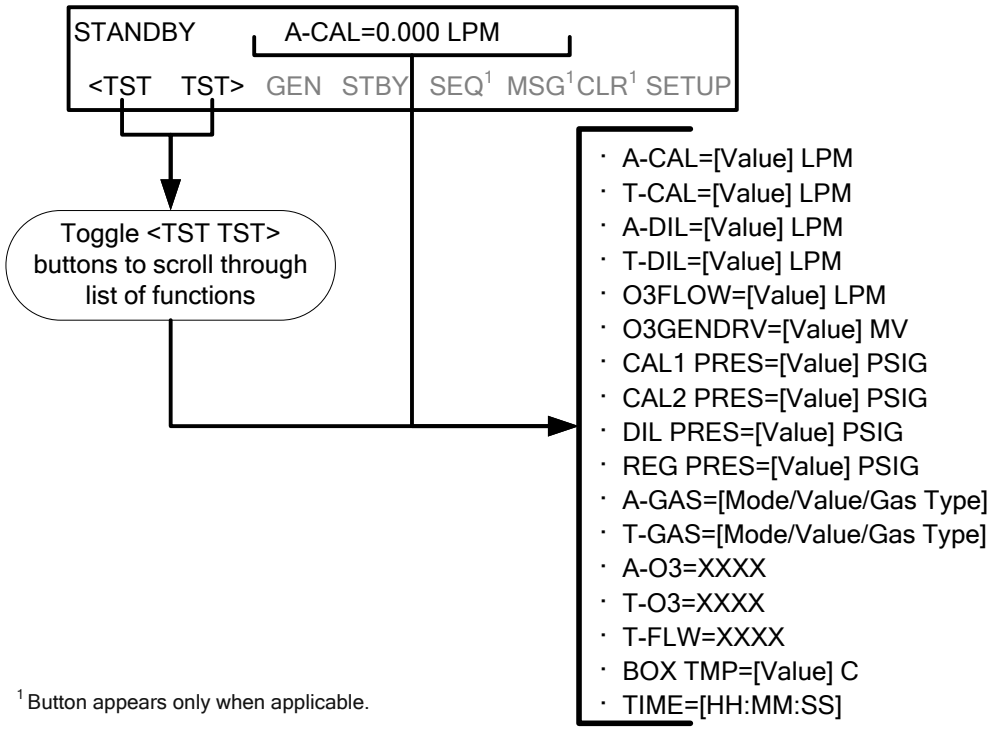

[1] Button appears only when applicable.

3. If your calibrator is operating via Ethernet and your network is running a dynamic host configuration protocol (DHCP) software package, the Ethernet will automatically configure its interface with your LAN. However, it is a good idea to check these settings to ensure that the DHCP has successfully downloaded the appropriate network settings from your network server (See Section 6.5.1).

If your network is not running DHCP or if you wish to establish a more permanent Ethernet connection, you will have to configure the calibrator's Ethernet interface manually (See Section 6.5.1.1).

3.3.5. SETTING UP THE CALIBRATION GAS INLET PORTS

The T700H Source Monitoring Dilution Calibrator generates calibration gases of various concentrations by precisely mixing component gases of known concentrations with diluent (zero air or nitrogen). The instrument can also use the gas phase titration method for generating very precise concentrations of NO_2.

In either case, it is necessary to program the concentrations of the component gases being used into the T700H's memory.

3.3.6. DEFAULT GAS TYPES

The T700H calibrator is programmed with the following default gas types corresponding to the most commonly used component gases:

Table 3-7: T700H Default Gas Types

NAME	GAS TYPE
NONE	Used for gas inlet ports where no gas bottle is attached
O_2	oxygen
O_3	ozone
SO_2	sulfur dioxide
H_2S	hydrogen sulfide
N_2O	nitrous oxide
NO	nitric oxide
NO_2	nitrogen dioxide
NO_X	Nitrogen oxides
NO_Y	Nitrogen oxides
NH_3	ammonia[1]
CO	carbon monoxide
CO_2	carbon dioxide
HC	General abbreviation for hydrocarbon
[1] It is not recommended that ammonia be used in the T700H.	

3.3.7. USER DEFINED GAS TYPES

3.3.7.1. User Defined Gas Types – General

The T700H calibrator can accept up to four different user defined gases. This allows the use of:

- less common component gases not included in the T700H's default list;
- more than one bottle of the same gas but at different concentrations; in this case, different user-defined names assigned to different bottles of gas

EXAMPLE: Two bottles of CO_2 are being used, allow the calibrator to create two different CO_2 calibration gases at the same flow rate.

Since identical names must not be assigned to two different bottles, one bottle can be programmed using the default name "CO2" and the other bottle programmed by assigning a user defined name such as "CO2A".

Alternatively both bottles can be assigned user defined names; e.g. CO2A and CO2B

User defined gas names are added to the T700H's gas library and will appear as choices during the various calibrator operations along with the default gas names listed in Section 3.3.6.

In its default state, the T700H's four user defined gases are named **USR1**, **USR2**, **USR3** and **USR4**, each with a default **MOLAR MASS** of **28.890** (the **MOLAR MASS** of ambient air). All four are **ENABLED.**

To define a **USER GAS** you must first define the GAS NAME and then set the MOLAR MASS.

3.3.7.2. User Defined Gas Types – Defining the Gas Name

In this example, we will be using PROPANE (C2H8). Press:

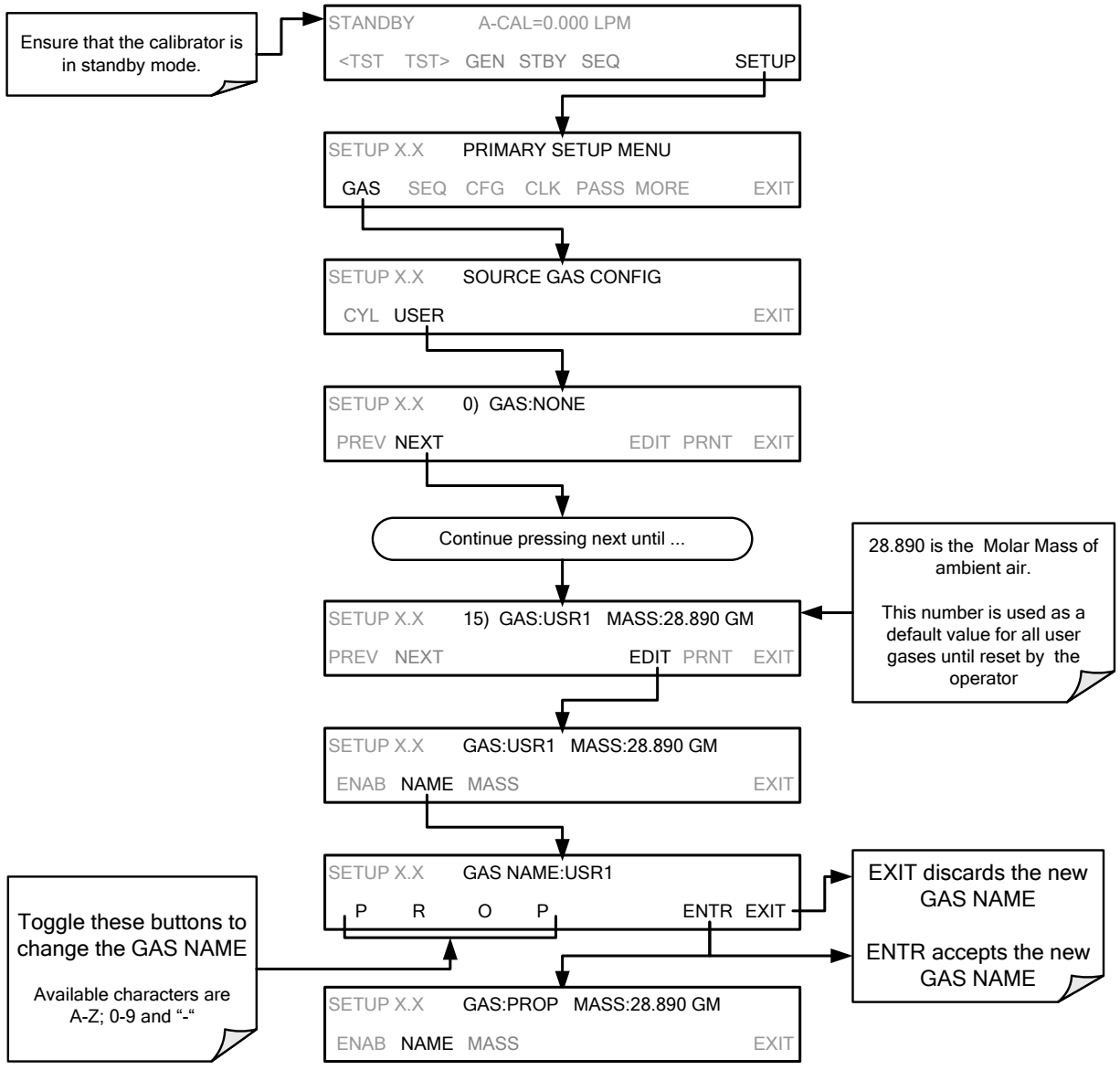

Alternatively, one could use the chemical formula for this gas, c_2h_8 or any other 4-letter name (e.g., PRPN, MY-1, etc.)

NOTE

If you have the same type of gas, but two different concentrations (for example, two concentrations of CO_2), assign the second concentration to one of the user defined gases (e.g. CO2 {default name} and CO2B {user defined}).

3.3.7.3. User Defined Gas Types – Setting the MOLAR MASS

The molar mass of a substance is the mass, expressed in grams, of 1 mole of that specific substance. Conversely, one mole is the amount of the substance needed for the molar mass to be the same number in grams as the atomic mass of that substance.

EXAMPLE: The atomic weight of Carbon is 12.011 therefore the molar mass of Carbon is 12.011 grams, conversely, one mole of carbon equals the amount of carbon atoms that weighs 12.011 grams.

Atomic weights can be found on any Periodic Table of Elements.

To determine the Molar mass of a gas, add together the atomic weights of the elements that make up the gas.

EXAMPLE: The chemical formula for Propane is $\mathbf{C_2H_8}$. Therefore the molecular mass of propane is:

$$(12.011 \times 2) + (1.008 \times 8) = 24.022 + 8.064 = \mathbf{32.086}$$

To set the molar mass of a user defined gas, press:

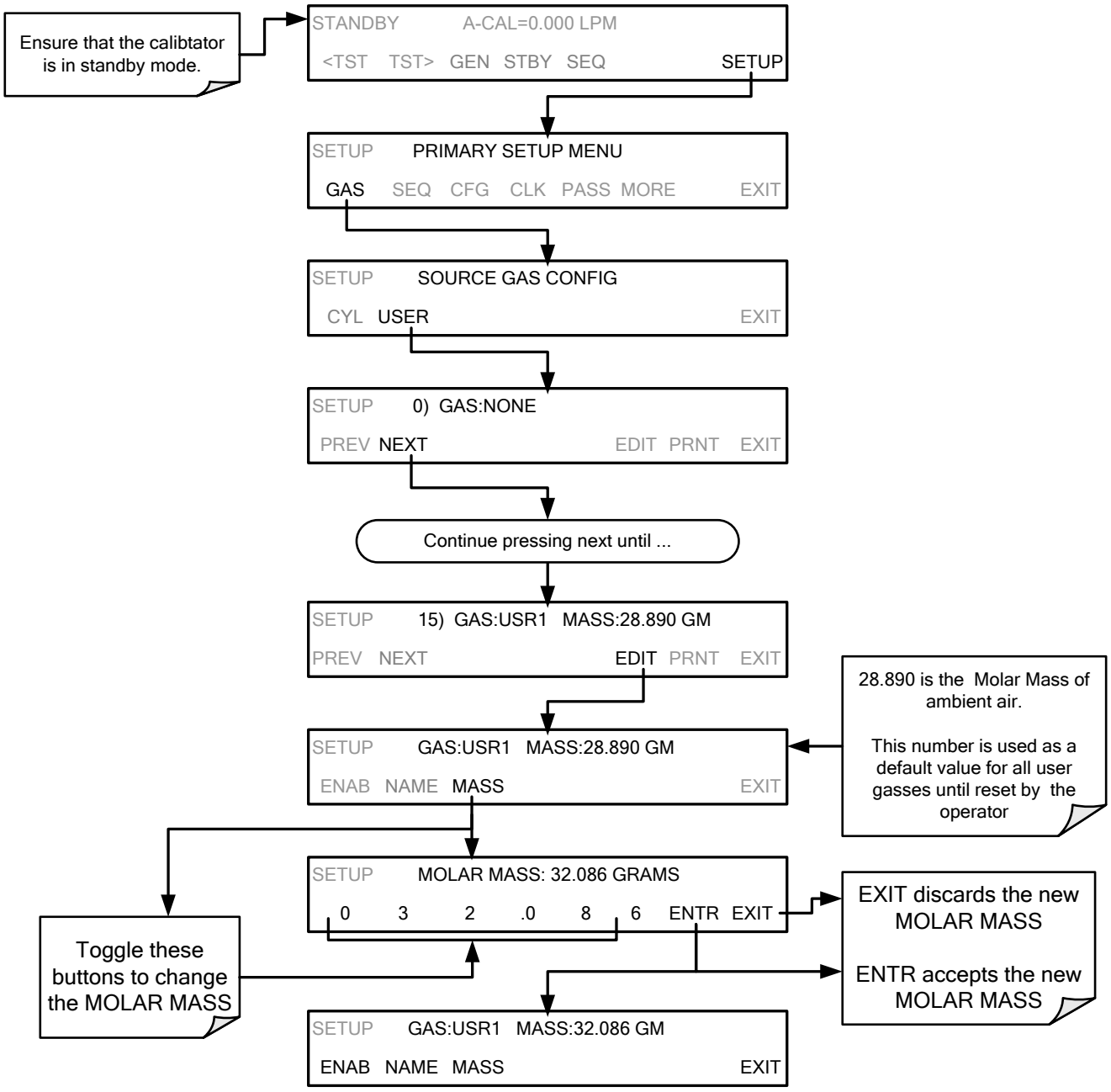

NOTE

If the contents of the bottle are predominantly N_2, use the molar mass of N_2 (28.01).

3.3.7.4. Enabling and Disabling Gas Types

By default, all of the gases listed in Section 3.3.6 and the four undefined **USER** gases are **ENABLED.** Any of these can be disabled. Disabling a gas type means that it does not appear in certain prompts during portions of the T700H's operation (e.g. setting up sequences) and is not figured into the calibrators calculating when determining calibration mixtures.

To disable a gas type, press:

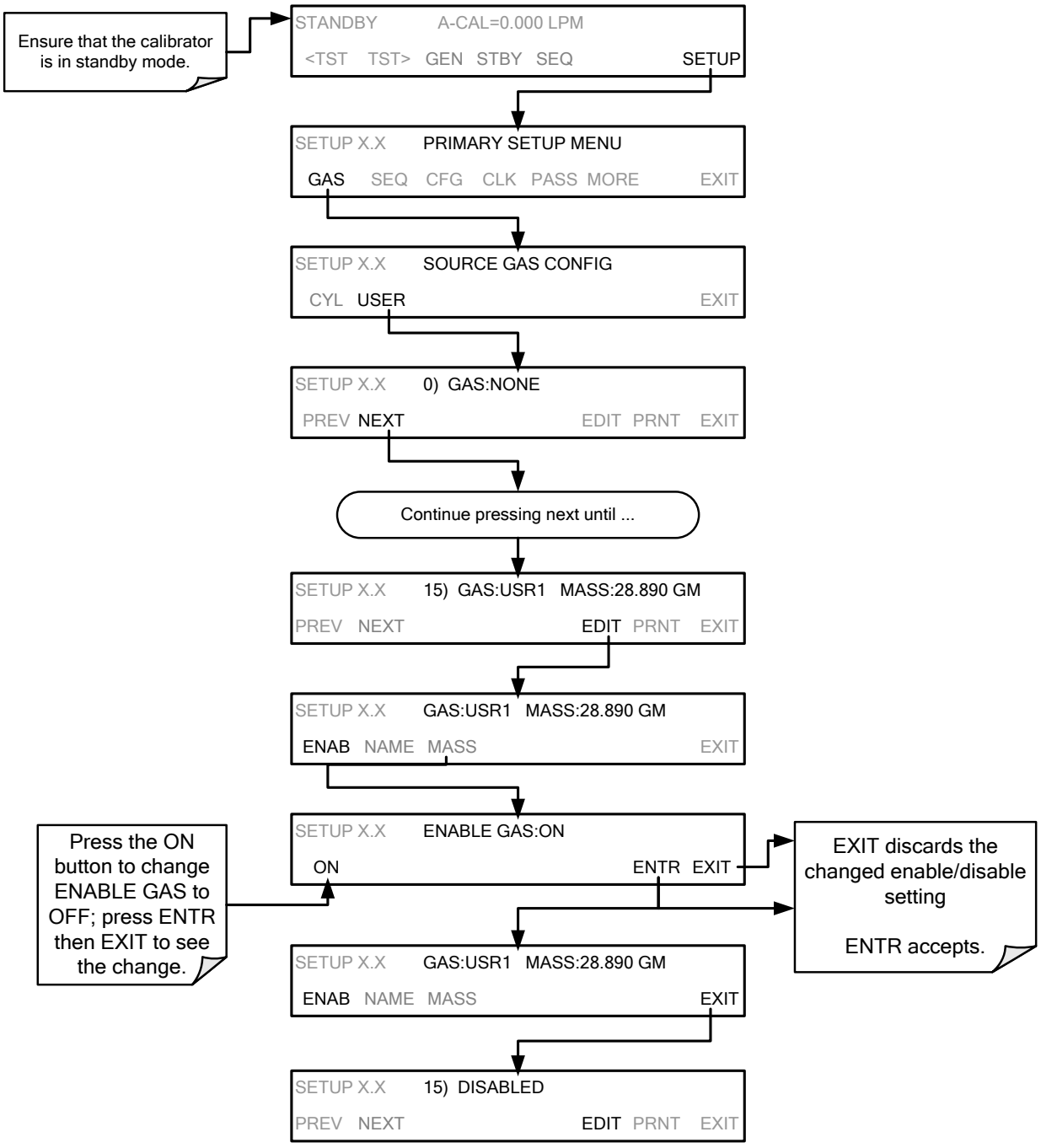

3.3.8. DEFINING CALIBRATION SOURCE GAS CYLINDERS

3.3.8.1. Setting Up the Ports with Single Gas Cylinders

To program the T700H calibrator's source gas input ports for a single gas cylinder, press:

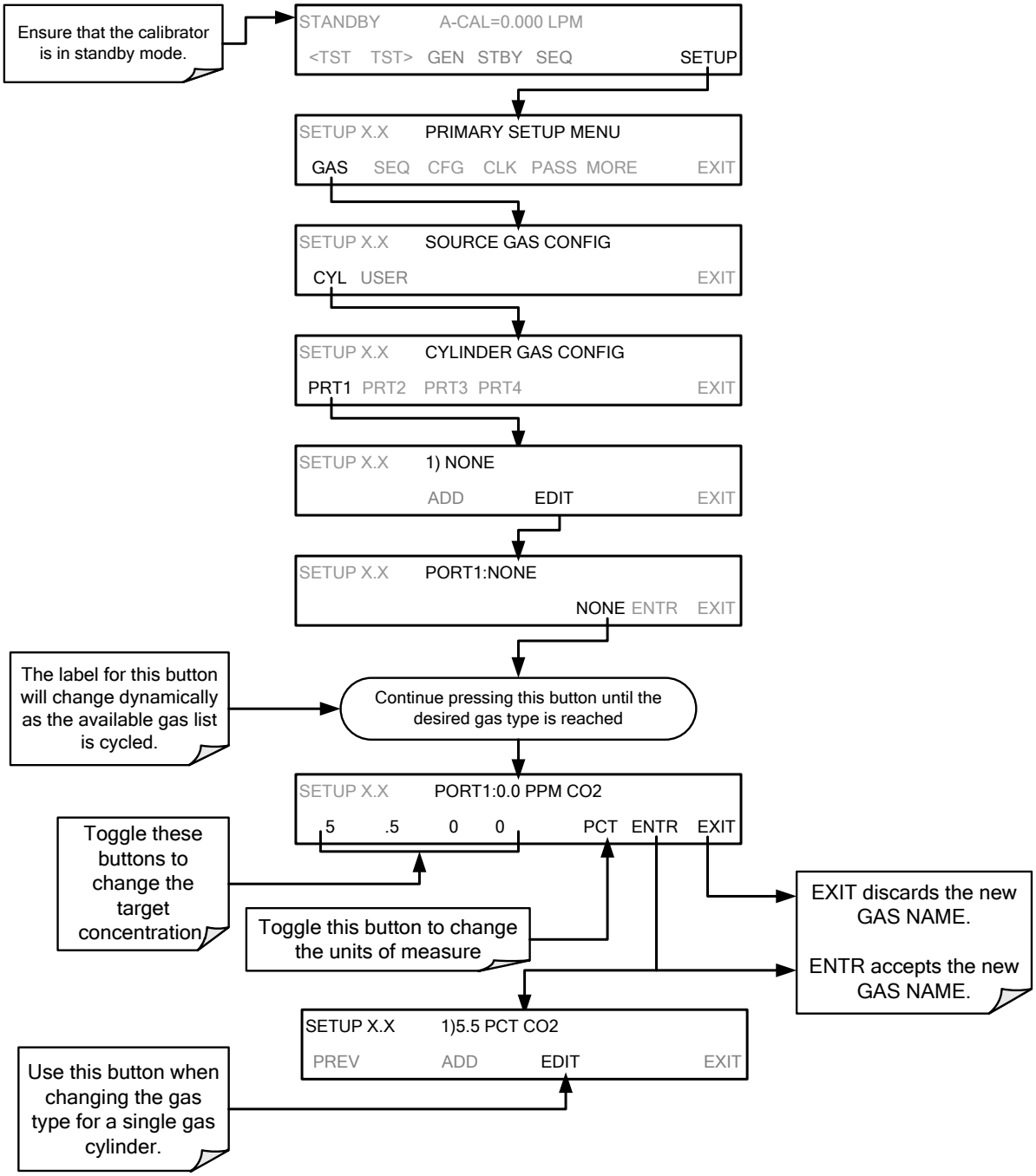

Table 3-8: T700H Units of Measure List

SYMBOL	UNITS	RESOLUTION
PPM	parts per million	000.0
PPB	parts per billion	0000.
MGM	milligrams per cubic meter	000.0
UGM	micrograms per cubic meter	0000.
PCT	percent	0.000
PPT	parts per thousand	00.00

Repeat the above steps for each of the T700H calibrator's four gas inlet ports. If no gas is present on a particular port, leave it set for the default setting of **NONE.**

3.3.8.2. Setting Up the Ports with Multiple Gas Cylinders

Some applications utilize canisters of source gas that contain more than one component gas. To program a cylinder containing multiple gases, press:

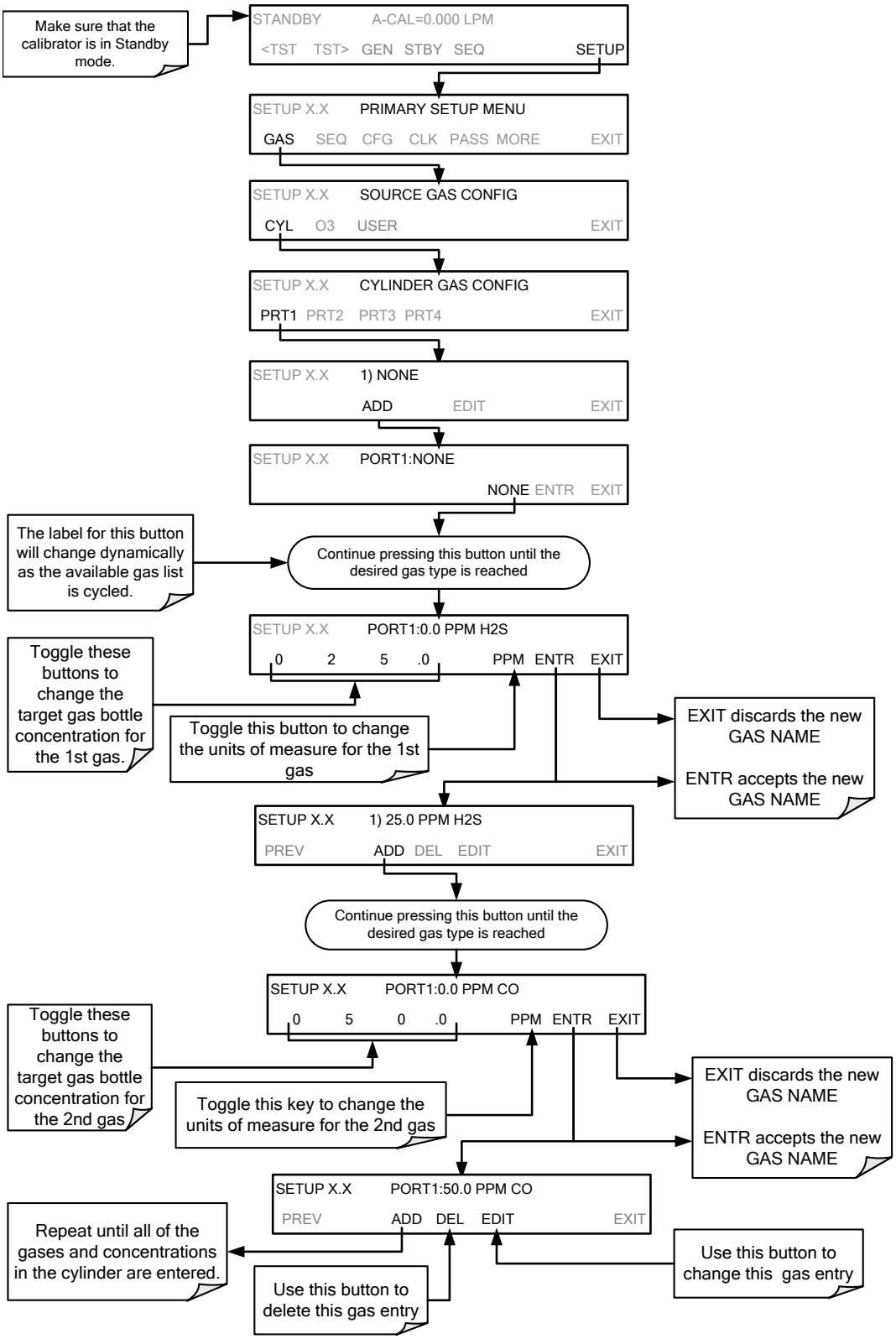

3.3.9. SETTING THE T700H'S TOTAL GAS FLOW RATE

The default total gas flow rate for the T700H Source Monitoring Dilution Calibrator is 2 LPM. The calibrator uses this flow rate, along with the concentrations programmed into the calibrator for the component gas cylinders during set up, to compute individual flow rates for both diluent gas and calibration source gases in order to produce calibration mixtures that match the desired output concentrations.

This Total Flow rate may be changed to fit the users' application. Once the flow is changed, then the new flow value becomes the total flow for all the gas concentration generated and computes again the individual flow rates of the component gases and diluent accordingly.

NOTE

- **The minimum total flow should equal 150% of the flow requirements of all of the instruments to which the T700H will be supplying calibration gas.**
- **Example: If the T700H is will be expected to supply calibration gas mixtures simultaneously to a system in composed of three analyzers each requiring 2 LPM , the proper Total Flow output should be set at:**

(2 + 2 + 2) x 1.5 = 9.000 LPM

To set the **TOTAL FLOW** of the of the T700H Source Monitoring Dilution Calibrator, press:

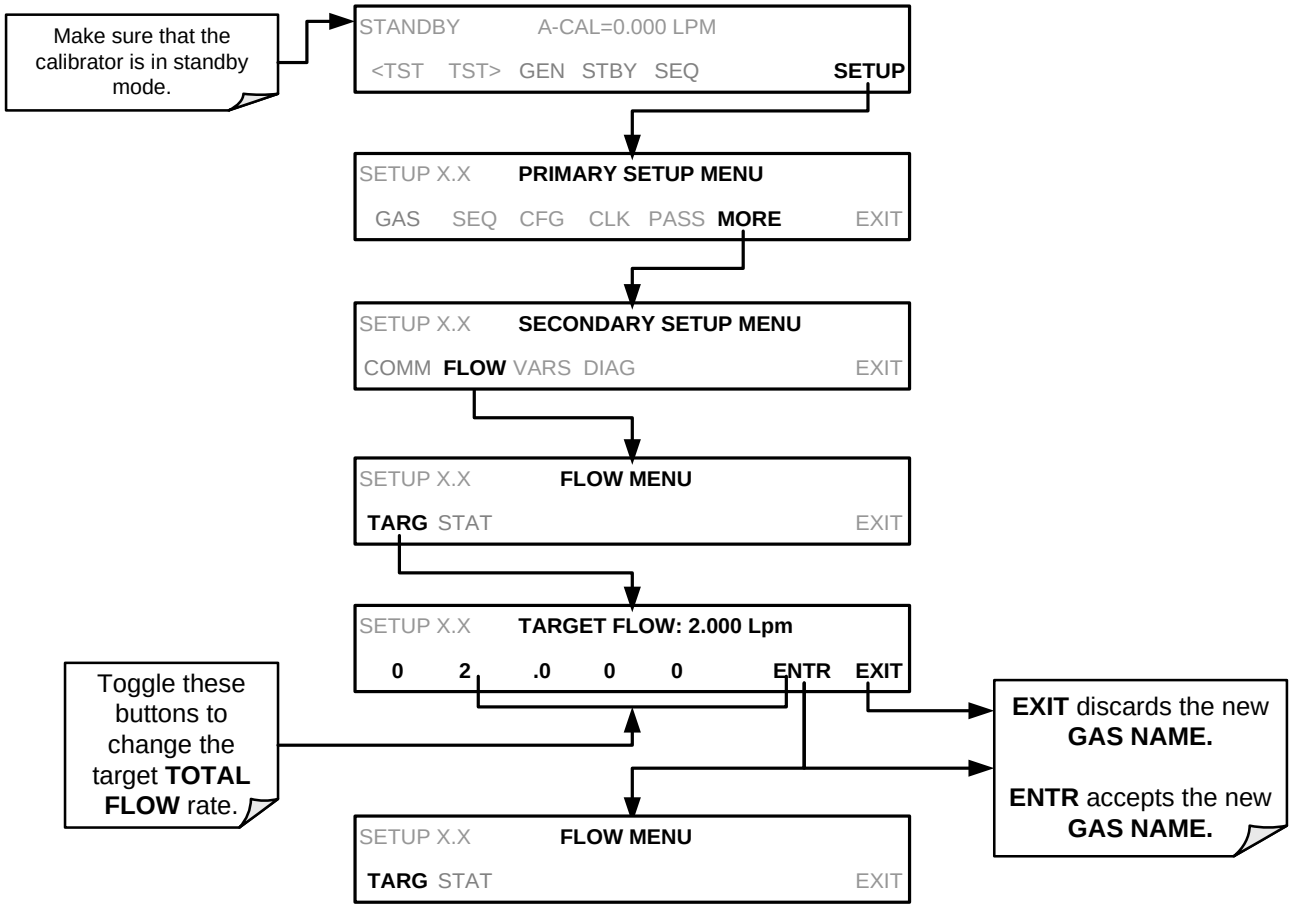

NOTE

Do NOT set the TOTAL FLOW rate to be <10% or >100% of the full scale rating of the diluent MFC.

The **TOTAL FLOW** is also affected by the following:

- The **GENERATE → AUTO** menu (see Section 5.4.1) or;
- As part of a **GENERATE** step when programming a sequence (see Section 5.5.2.1).

The operator can individually set both the diluent flow rate and flow rates for the component gas cylinders as part of the following:

- The **GENERATE → MANUAL** menu (see Section 5.4.2) or;
- As part of a **MANUAL** step when programming a sequence (see Section 5.5.2.9).

4. OPTIONAL HARDWARE AND SOFTWARE

This includes a brief description of the hardware and software options available for the T700H Source Monitoring Dilution Calibrator. For assistance with ordering these options, please contact the Sales department of Teledyne API at:

TOLL-FREE: **800-324-5190**
FAX: **+1 858-657-9816**
TEL: **+1 858-657-9800**
E-MAIL: **api-sales@teledyne.com**
WEB SITE: **www.teledyne-api.com**

4.1. GAS FLOW OPTIONS

4.1.1. FLOW RATE OPTIONS (OPT 07A, OPT 7B, OPT 08A & OPT 08B)

The standard T700H Source Monitoring Dilution Calibrator is equipped with one calibration gas mass flow controller and one diluent gas mass flow controller. Table 4-1 shows the flow rates for the standard T700H, as well as various flow rate options.

Table 4-1: T700H Gas Flow Rate Options

Option	Affected Mass Flow Controller	Flow rates	NOTES:
STANDARD	Cal/Source Gas MFC	0 – 100 cm^3/min	
	Diluent Gas MFC	0 – 10 LPM	
OPT – 07A	Cal/Source Gas MFC	0 – 50 cm^3/min	Replaces 0 – 100 cm^3/min Cal Gas MFC
OPT – 07B	Cal/Source Gas MFC	0 – 2000 cm^3/min	Replaces 0 – 100 cm^3/min Cal Gas MFC
OPT – 08A	Diluent Gas MFC	0 – 5 LPM	Replaces 0 – 10 LPM Diluent Gas MFC
OPT – 08B	Diluent Gas MFC	0 – 20 LPM	Replaces 0 – 10 LPM Diluent Gas MFC

4.1.2. THREE MFC CALIBRATOR SOURCE GAS

This option adds an additional mass flow controller on the calibration gas stream. When this option is installed the T700H has both calibration gas MFCs on the same gas stream, installed in parallel (see Figure 4-1). The calibrator turns on the MFC with the lowest flow rate that can accommodate the requested flow and can therefore supply the most accurate flow control. When a flow rate is requested that is higher than the highest rated MFC (but lower than their combined maximum flow rating), both controllers are activated.

EXAMPLE:

- Calibrator with one calibration gas MFC configured for 0-5 LPM:

  Maximum gas flow = 5 LPM
  Minimum gas flow = 500 cm^3/min

- Calibrator with two calibration gas MFCs configured for 0-1 LPM and 0-5 LPM:

  Calibration gas flow rates:

  5.001 to 6.000 LPM; both MFCs active
  1.001 LPM – 5.000 LPM; High MFC active;
  0.100 LPM – 1.000 LPM; Low MFC active

When this option is installed the test measurements that show the MFC actual and target flows (e.g., **ACT CAL**; **TARG CAL**) show the sum of the flows of all the active MFCs. On the other hand, the pressure test measurements show the pressure for only one MFC, not the sum as it is assumed that gas pressure is the same for all MFCs.

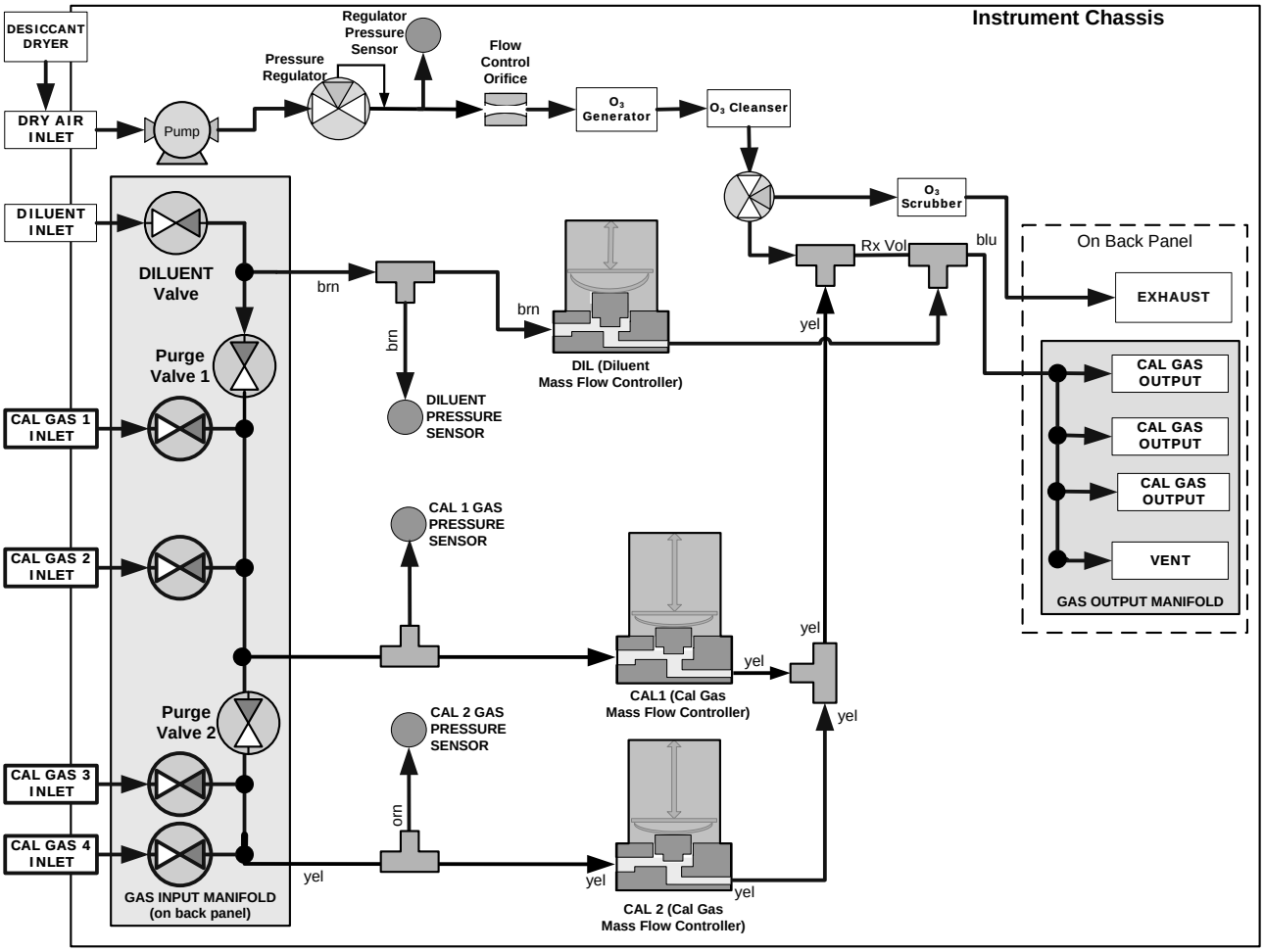

Figure 4-1: Basic T700H with Multiple Calibration Gas MFCs

4.1.3. GAS BLENDING OPTION

The Gas Blending option allows accurate blending of calibration gases through the use of mass flow controllers, yielding a gas mixture of specified concentrations.

When the Gas Blending feature is enabled, the display shows GAS1, GAS2, O3, CAL1, CAL2, and DIL while in STANDBY mode. If the feature is not enabled (standard calibration), the display shows GAS, O3, CAL, and DIL while in STANDBY mode.

Dual Blend Mode vs Standard Calibration

4.1.3.1. Enabling Gas Blending Option

1. Press **SETUP>MORE>DIAG**
2. Change the password to **929**.
3. Press **ENTR**.

   The calibrator is now in the **DIAG** menu.
4. Press **NEXT** until the Param field shows **FACTORY OPTIONS**
5. Press **ENTR**.
6. In the Factory Options menu press **NEXT** until the Param field shows **ENABLE GAS BLENDING:OFF**.
7. Press the **OFF** button to turn on the gas blending feature.

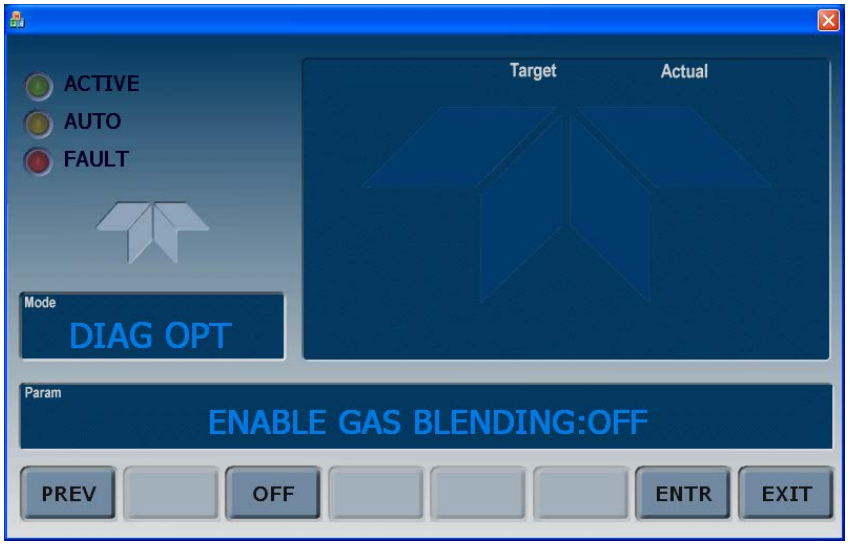

The Param field now shows **ENABLE GAS BLENDING:ON**

8. Press the **ENTR** button to accept the new setting.

The calibrator then reboots, and the front panel display shows the Gas Blending screen.

(Note: To **disable** the Gas Blending feature, repeat the same SETUP procedures except press the ON button so that the Param field shows ENABLE GAS BLENDING:OFF, and press the ENTR button to accept the new setting. The calibrator then reboots to activate the change).

9. Connect the gas cylinders to two or more of the four rear panel connections (CYL1 through CYL4) as appropriate for your current application.

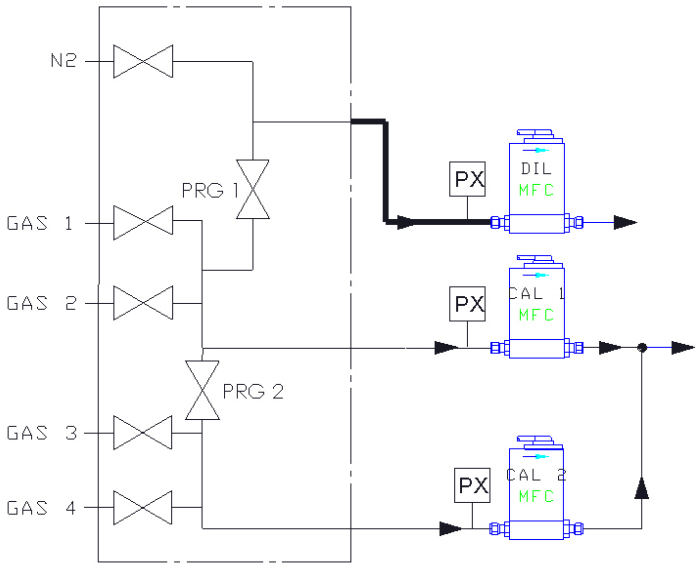

The above illustration shows that ports GAS1 and GAS2 (labeled CYL1 and CYL2 on the calibrator's rear panel) connect to MFC 1 (Cal Gas 1), and GAS3 and GAS4 (labeled CYL3 and CYL4 on the calibrator's rear panel) connect to MFC 2 (Cal Gas 2).

CAL1 (MFC1) controls CYL1 (GAS1) and CYL2 (GAS2) ports, which correspond to Port 1 and Port 2 respectively in the CYLINDER GAS CONFIG menu (labeled PRT1 and PRT2).

CAL2 (MFC2) controls ports CYL3 (GAS3) and CYL4 (GAS4), which correspond to Port 3 and Port 4 respectively in the CYLINDER GAS CONFIG menu (labeled PRT3 and PRT4).

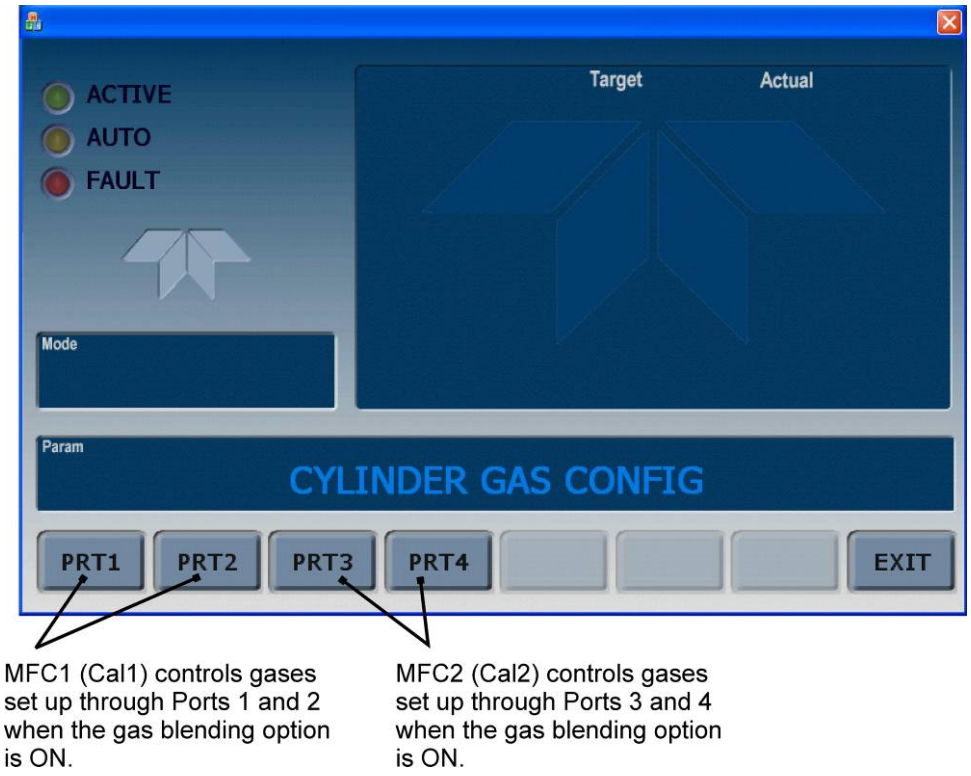

Once the bottles are securely connected to the rear panel, set up the gases next.

4.1.3.2. Gas Blending Setup and Generation

Refer to Sections 3.3.5 through 3.3.8 for gas setup details.

Note that in order to blend two cal gases, one cylinder must be connected to either CYL1 or CYL2 on the rear panel of the T700H, and the other cylinder must be connected to either CYL3 or CYL4 on the rear panel, in order for the MFCs to properly create the dilution.

For example, to create a dilution of SO_2 with CO connect the SO_2 to CYL1 (controlled by MFC1) and connect the CO to CYL4 (controlled by MFC2).

Table 4-2. Status of Internal Pneumatics During GENERATE Gas Blending Mode per above example

MODE	VALVES (X = Closed; O = Open)								MFCs		
	CYL 1	CYL 2	CYL 3	CYL 4	PURGE 1	PURGE 2	DILUENT	O_3 GEN	CAL1	CAL2	DILUENT
GPT	O[1]	x	x	O[1]	X	X	O	O	ON	ON	ON

[1] The valve associated with the cylinder containing source (cal) gas is open.

To generate the gas blending operation, use the **GENERATE → AUTO** feature, as follows:

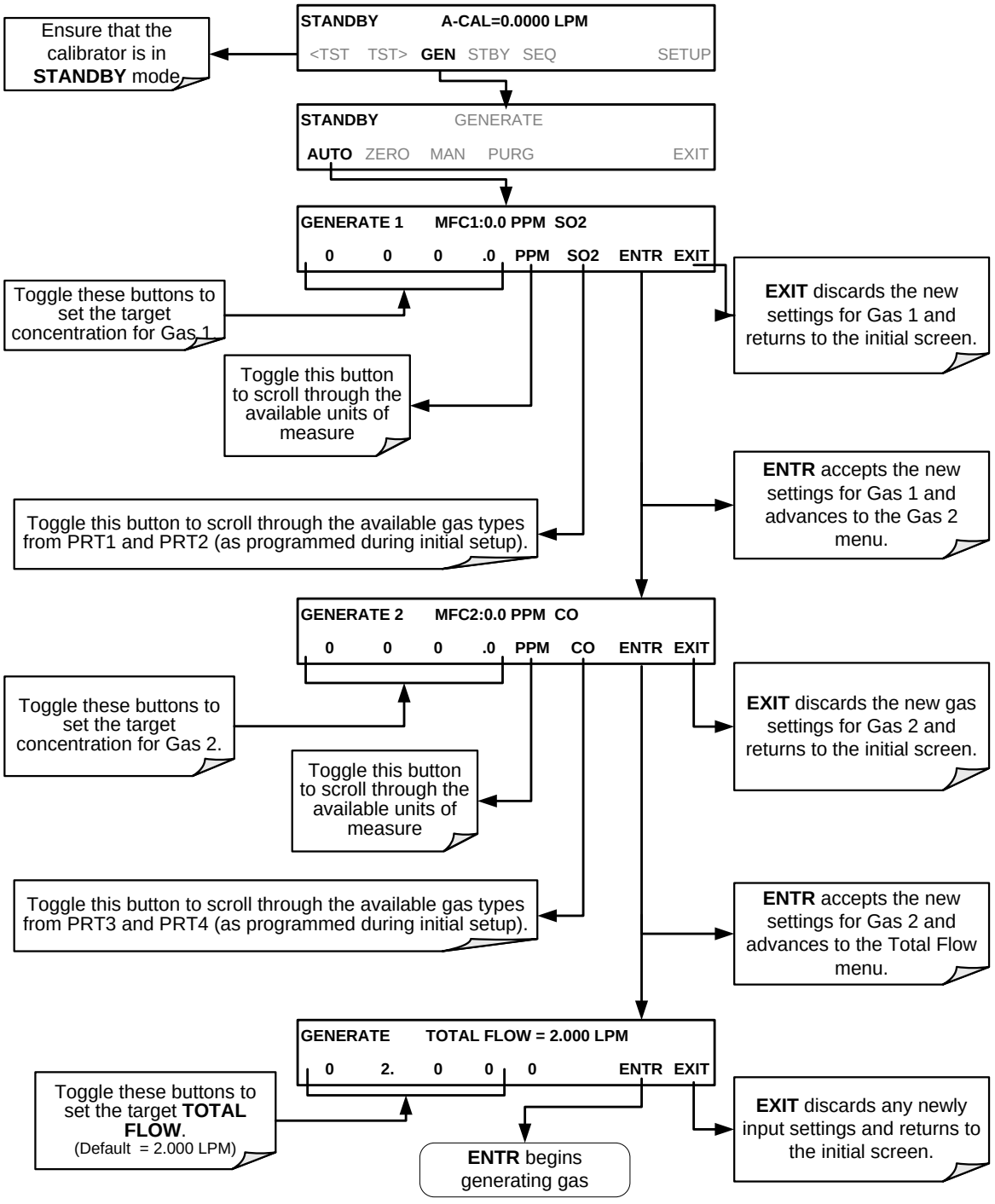

4.1.3.3. Front Panel Display During Generate Mode

The front panel display "Target" column shows the concentration and flow that you set, and the "Actual" column shows the actual concentration and flow that the calibrator is generating.

If the "Actual" values are displayed in red (Figure 4-2), the calibrator is still generating. However, if the values are still red after 10-15 seconds, it means the target values were set outside the allowable range (by >10% above or below); in this case, you will need to return to the setup procedures and adjust either the flow or the desired concentration.

Figure 4-2: Front Panel Display when Target Values Set Outside Allowable Range

4.1.3.4. GPT Operation with Gas Blending Option

While in blending gas option and running Gas Phase Titration (GPT) (refer to Section 5.4.5), the following table and pneumatic illustration show the status of the valves.

Table 4-3: Status of Internal Pneumatics During GENERATE → GPT Mode

MODE	VALVES (X = Closed; O = Open)								MFCs		
	CYL 1	CYL 2	CYL 3	CYL 4	PURGE 1	PURGE 2	DILUENT	O_3 GEN	CAL1	CAL2[1]	DILUENT
GPT	O[2]	O[2]	O[2]	O[2]	X	O	O	O	ON[3]	ON[3]	ON

[1] Only present when additional cal gas MFC option is installed.

[2] The valve associated with the cylinder containing NO source gas is open.

[3] In instruments with multiple MFCs, the CPU chooses which MFC to use depending on the target gas flow requested.

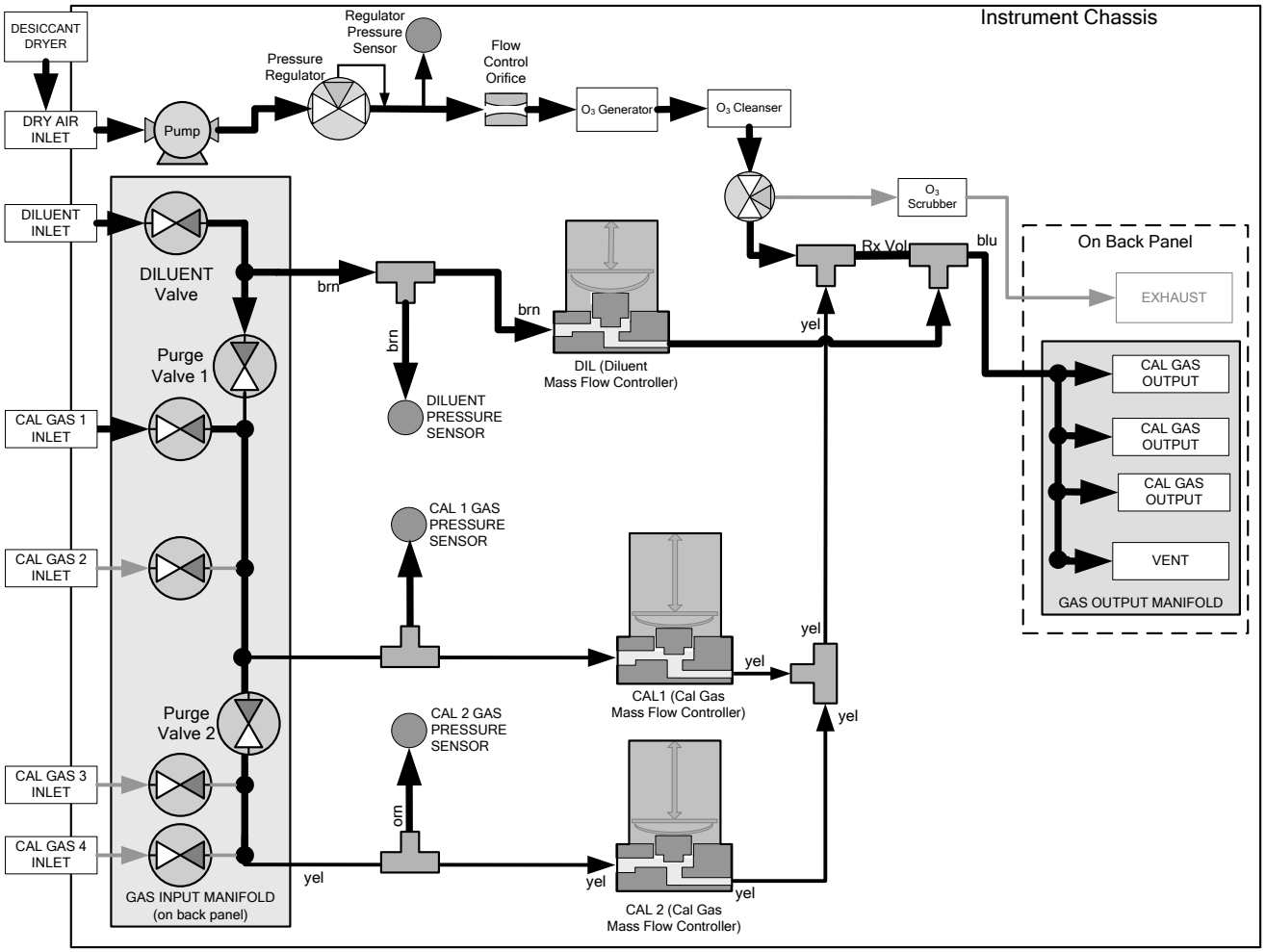

Figure 4-3 : Gas Flow through T700H in GPT Mode

4.2. RACK MOUNT KITS (OPT 20A, OPT 20B & OPT 21)

There are several options for mounting the calibrator in standard 19" racks. The slides are three-part extensions, one mounts to the rack, one mounts to the calibrator chassis and the middle part remains on the rack slide when the calibrator is taken out. The calibrator locks into place when fully extended and cannot be pulled out without pushing two buttons, one on each side.

The rack mount brackets for the calibrator require that you have a support structure in your rack to support the weight of the calibrator. The brackets cannot carry the full weight of a calibrator and are meant only to fix the calibrator to the front of a rack, preventing it from sliding out of the rack accidentally.

OPTION NUMBER	DESCRIPTION
OPT 20A	Rack mount brackets with 26 in. chassis slides (standard)
OPT 20B	Rack mount brackets with 24 in. chassis slides.
OPT 21	Rack mount brackets only

4.3. CARRYING STRAP HANDLE (OPT 29)

The chassis of the T700H calibrator allows to attach a strap handle for carrying the instrument. The handle is located on the right side and pulls out to accommodate a hand for transport. When pushed in, the handle is nearly flush with the chassis, only protruding out about 9 mm (3/8").

Installing the strap handle prevents the use of the rack mount slides, although the rack mount brackets, Option 21, can still be used.

CAUTION

THE T700H WEIGHS ABOUT 18 KG (39 POUNDS).

TO AVOID PERSONAL INJURY WE RECOMMEND TWO PERSONS LIFT AND CARRY THE CALIBRATOR.

ENSURE TO DISCONNECT ALL CABLES AND TUBING FROM THE CALIBRATOR BEFORE CARRYING IT.

4.4. COMMUNICATION OPTIONS

4.4.1. SERIAL COMMUNICATIONS CABLES (OPT 60A, 60B, 60C, AND 60D)

For remote serial, network and Internet communication with the analyzer, the following communication cables are available:

Option	Type	Description
60A	RS-232	Shielded, straight-through DB-9F to DB-25M cable, about 1.8 m long. Used to interface with older computers or code activated switches with a DB-25 serial connectors
60B	RS-232	Shielded, straight-through DB-9F to DB-9F cable of about 1.8 m length
60C	Ethernet	Patch cable, 2 meters long
60D	USB	Cable for connection between rear panel USB port and personal computer

4.4.2. RS-232 MULTI-DROP (OPT 62)

The multi-drop option enables communications of up to eight instruments with the host computer over a chain of RS-232 cables via both rear panel DB9-connector COM ports, and is subject to the distance limitations of the RS-232 standard.

The multidrop option consists of a printed circuit assembly (PCA) that is seated on the analyzer's CPU card and is connected to the CPU and the motherboard. This PCA converts the analyzer's RS 232 port to Multidrop configuration.

Each analyzer in the chain will require this card (Option 62), and a cable (Option 60B). See Section 7.2.1 for information regarding setting up the multidrop network.

4.5. EXTERNAL VALVE DRIVER (OPT 48A & OPT 48B)

Either one of two external valve driver assemblies (12V or 24V) is available that can drive up to eight, 8-watt valves based on the condition of the status block bits described below The option consists of a custom Printed Circuit Assembly (PCA) that mounts to the back of the T700H and a universal AC-to-DC power supply.

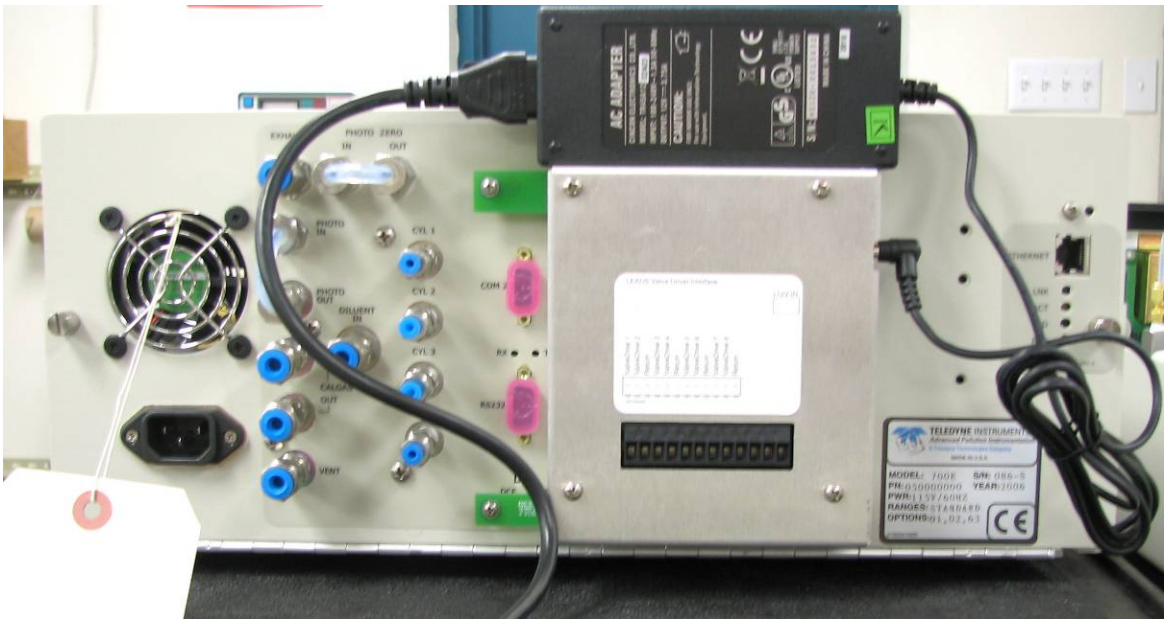

Figure 4-4: T700H Rear Panel Valve Driver Installed

OPTION	DESCRIPTION
OPT 48A	External Valve Driver Capability – 12V
OPT 48B	External Valve Driver Capability – 24V

Depending upon the capacity of the external supply either four (standard) or eight valves can be simultaneously energized.

The PCA is constructed such that it plugs through the rear panel into the Control Output connector, J1008, on the T700H's motherboard.

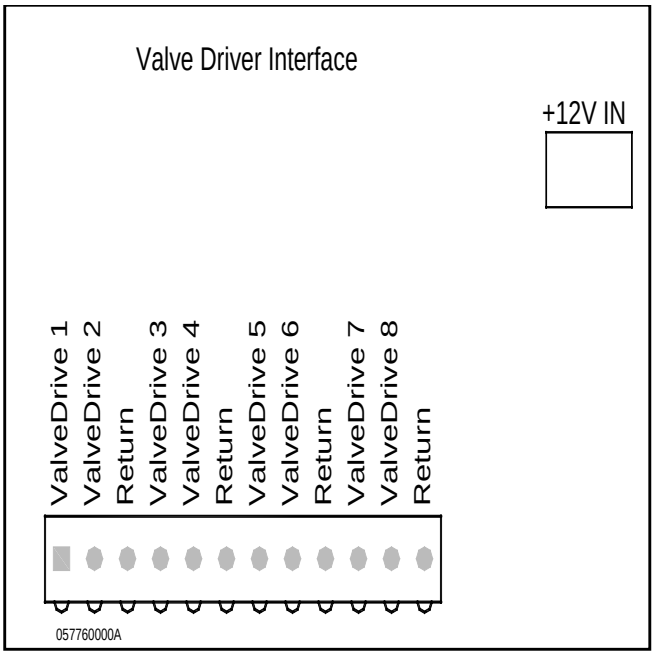

Figure 4-5: Valve Driver PCA Layout

When one of the Control Outputs is energized, the base of the associated PNP valve driver transistor (U1 through U8) is taken to ground and the emitter-collector junction becomes active.

Electronic connections should be made as follows:

- Valves should be connected between one of the Valve Drive outputs and one of the Return pins.
- The external power supply must be connected to the Valve Driver Interface using the +12V coaxial input connector on the top, right-hand side of the assembly.
- The external supply in turn must be connected to 85-264V, 47-63Hz mains.

The Valve Driver Outputs are mapped one-for-one to the Control Outputs 1 through 8 and can be manually actuated for troubleshooting using the Signal-I/O diagnostic function in the T700H software (see Section 9.4.11.5). However, the drive outputs are mapped in reverse to the status control bits such that Bit-0 (LSB) is valve drive 8 and Bit-7 is valve drive 1.

PART II
–
OPERATING INSTRUCTIONS

5. BASIC OPERATION

The T700H calibrator is a micro-computer-controlled calibrator with a dynamic menu interface for easy and yet powerful and flexible operation. All major operations are controlled from the front panel touch screen control. To assist in navigating the system's software, a series of menu trees can be found in Appendix A of this manual.

NOTE

The ENTR button may disappear if you select a setting that is invalid or out of the allowable range for that parameter, such as trying to set the 24-hour clock to 25:00:00. Once you adjust the setting to an allowable value, the ENTR button will reappear.

5.1. TEST FUNCTIONS

A variety of **TEST** functions are available for viewing at the front panel whenever the calibrator is at the **MAIN MENU**. These functions provide information about the present operating status of the calibrator and are useful during troubleshooting (see Section 9). Table 5-1 lists the available **TEST** functions.

To view these **TEST** functions, press:

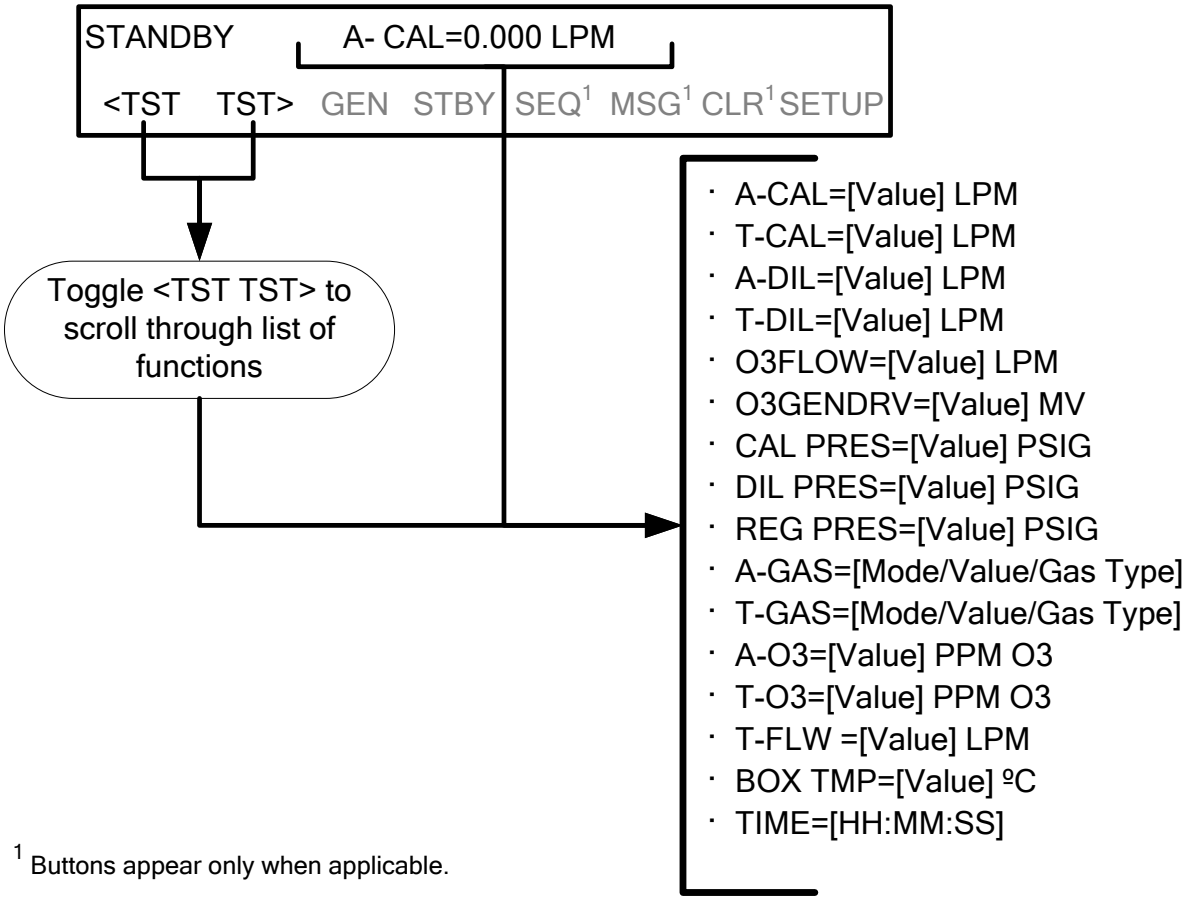

[1] Buttons appear only when applicable.

Figure 5-1: Viewing T700H Test Functions

Table 5-1: Test Functions Defined

DISPLAY	UNITS	DESCRIPTION
A-CAL	LPM	The actual gas flow rate of source gas being output by the calibrator
T-CAL	LPM	Target source gas flow rate for which the calibrator output is set
A-DIL	LPM	The actual gas flow rate of diluent (zero) gas being output by the calibrator
T-DIL	LPM	Target diluent (zero) gas flow rate for which the calibrator output is set
O3FLOW	LPM	The gas flow rate for which the O_3 generator is set
O3GENDRV	mV	The drive voltage of the O_3 generator
CAL PRES	PSIG	The gas pressure of source gas being supplied to the calibrator
DIL PRES	PSIG	The gas pressure of the Diluent gas being supplied to the calibrator Diluent pressure
REG PRES	PSIG	The gas pressure at the pressure regulator on the O_3 generator supply line
A-GAS	*n/a*	Actual concentration, and in some modes the actual flow rate, of the source gas in the calibration mixture being generated is displayed.
T-GAS	n/a	The Target concentration, and in some modes the target flow rate, of the source gas in the calibration mixture being generated is displayed.
A-O3	n/a	Actual mV drive value for the O_3 generator
T-O3	n/a	The Target mV drive value for the O_3 generator
T-FLW	LPM	The Target total flow
BOX TMP	°C	Internal chassis temperature
TEST[1]	mV	Displays the analog signal level of the TEST analog output channel
TIME	HH:MM:SS	Current time as determined by the calibrator's internal clock

[1] Only appears when the TEST channel has been activated

5.2. OVERVIEW OF OPERATING MODES

The T700H calibrator software has a variety of operating modes. The most common mode that the calibrator will be operating in is the **STANDBY** mode. In this mode, the calibrator and all of its subsystems are inactive (no LED lit on front panel display), although **TEST** functions and **WARNING** messages are still updated and can be examined via the front panel display.

The second most important operating mode is **SETUP** mode. This mode is used for performing certain configuration operations, such as programming the concentration of source gases, setting up automatic calibration sequences and configuring the analog/digital inputs and outputs. The **SETUP** mode is also used for accessing various diagnostic tests and functions during troubleshooting.

Figure 5-2: Front Panel Display

The mode field of the front panel display indicates to the user which operating mode the unit is currently running.

In addition to **STANDBY** and **SETUP**, other modes the calibrator can be operated in are listed in Table 5-2:

Table 5-2: Calibrator Operating Modes

MODE	DESCRIPTION
DIAG	One of the calibrator's diagnostic modes is being utilized. When the diagnostic functions that have the greatest potential to conflict with generating concentrations are active, the instrument is automatically placed into standby mode.
GENERATE	In this mode, the instrument is engaged in producing calibration gas mixtures.
AUTO	Automatically generates gas or gas mixtures based on user inputs.
ZERO	The calibrator generates diluent gas at a flow rate set by the user.
GPT	The calibrator is using the O_3 generator and source gas inputs to mix and generate calibration NO_2 gas using the gas phase titration method.
GPTZ	The calibrator is generating a baseline NO reading with the ozone subsystem flowing gas, but no ozone being produced. This mode is used in conjunction with the GPT mode when performing NO_2 converter efficiency tests on NO_x analyzers.
MANUAL	In this mode, the instrument is engaged in producing calibration gas mixtures.
PURGE	The calibrator is using diluent (zero air or nitrogen) to purge its internal pneumatics of all source gas and previously created calibration mixtures.
SETUP	**SETUP** mode is being used to configure the calibrator.
STANDBY	The calibrator and all of its subsystems are inactive.

5.3. STANDBY MODE

When the T700H Source Monitoring Dilution Calibrator is in standby mode, it is at rest. All internal valves are closed except the diluent inlet valve. The mass flow controllers are turned off.

- The **SETUP → GAS** submenu is only available when the instrument is in **STANDBY** mode.
- Some functions under the **SETUP → MORE → DIAG** submenu, those which conflict with accurate creation of calibration gas mixtures (e.g. **ANALOG OUTPUT STEP TEST**) automatically place the calibrator into **STANDBY** mode when activated.
- The MFC pressures are not monitored in standby mode since the MFCs are turned OFF. This prevents erroneous **MASS FLOW WARNING** messages from appearing.

NOTE
The T700H calibrator should always be placed in STANDBY mode when not needed to produce calibration gas. The last step of any calibration sequences should always be the STANDY instruction.

Table 5-3 shows the status of the T700H's various pneumatic components when the calibrator is in **STANDBY** mode.

Table 5-3: Status of Internal Pneumatics During STANDBY Mode

VALVES (X = Closed; O = Open)							MFCs		
CYL1	CYL2	CYL3	CYL4	PURGE	DILUENT	O_3 GEN	CAL1	CAL2[1]	DILUENT
X	X	X	X	X	O	X	OFF	OFF	OFF

[1] Present only when additional MFC option installed

For the O_3 generator, airflow is maintained during **STANDBY** mode so that the generator can continue to operate at its most efficient temperature.

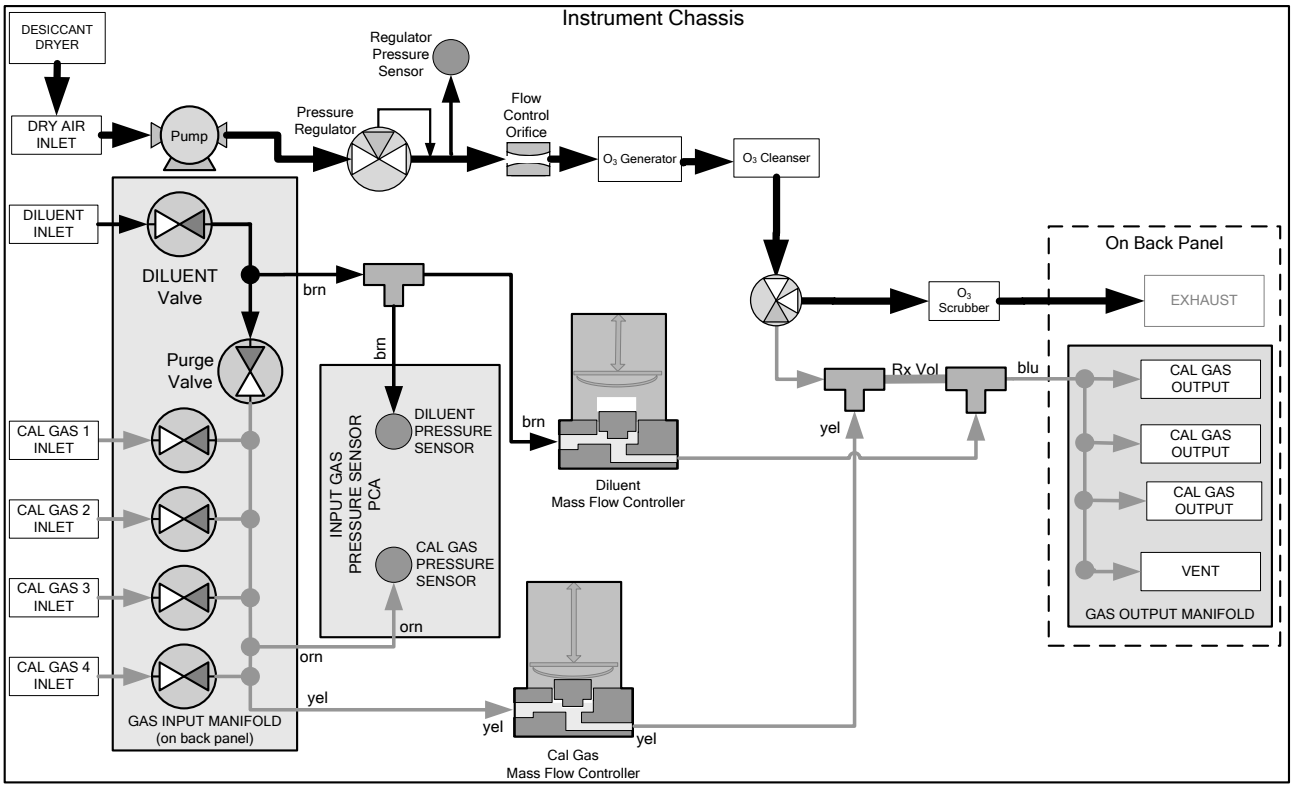

Figure 5-3: Gas Flow through T700H during STANDBY

5.4. GENERATE MODE

This mode allows the user to generate the desired calibration gas mixtures. The types of gas include NO, NO_2, SO_2, CO, HC or ZERO gas based on the source gas concentration entered during initial setup (see Section 3.3.8).

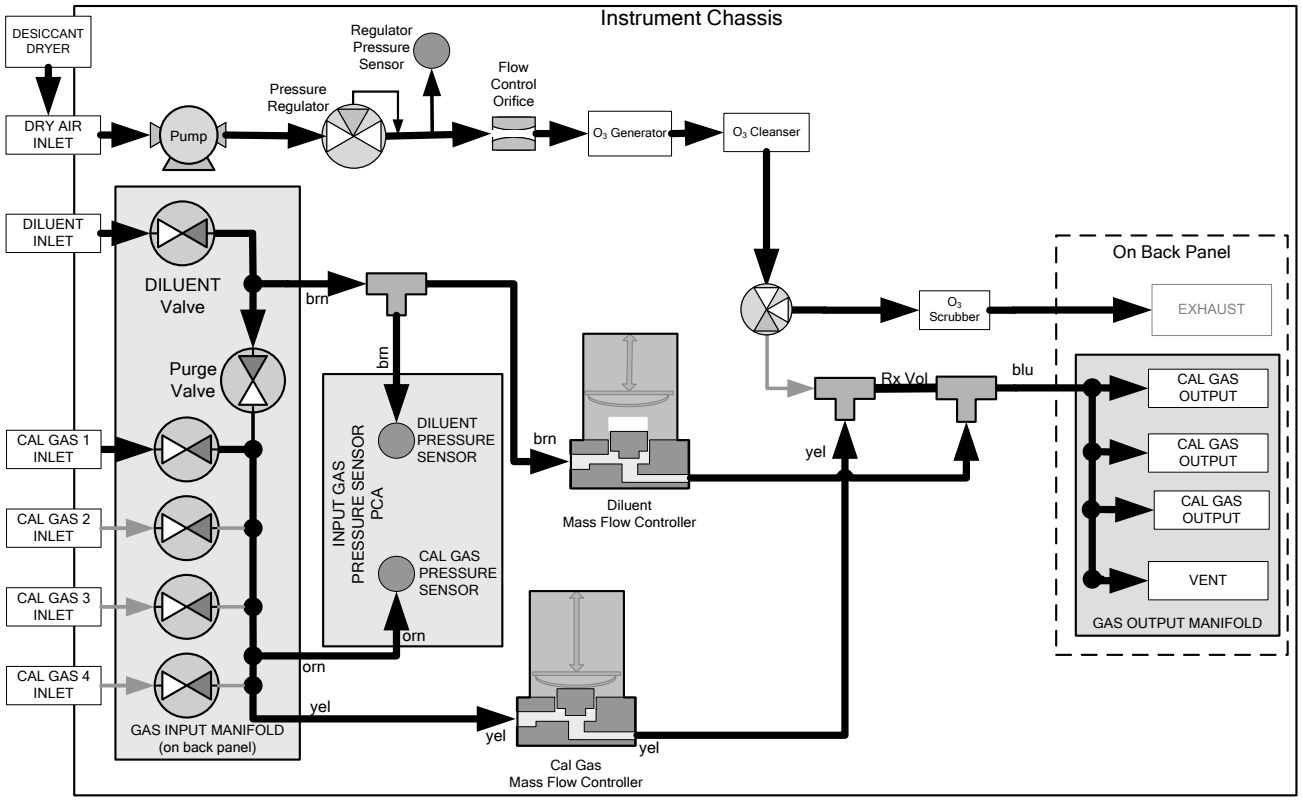

Figure 5-4: Gas Flow through Basic T700H in GENERATE Mode

Table 5-4 shows the status of the T700H's various pneumatic components when the calibrator is in **GENERATE** mode:

Table 5-4: Status of Internal Pneumatics During GENERATE Mode

GAS TYPE	VALVES (X = Closed; O = Open)							MFCs		
	CYL 1	CYL 2	CYL 3	CYL 4	PURGE	DILUENT	O_3 GEN	CAL1	CAL2[1]	DILUENT
Generate Source Gas	O[2]	O[2]	O[2]	O[2]	X	O	X	ON[3]	ON[3]	ON
Generate O_3	X	X	X	X	X	O	O	OFF	OFF	OFF

[1] Only present when additional MFC option is installed.

[2] The valve associated with the cylinder containing NO source gas is open.

[3] In instrument with multiple MFCs the CPU chooses which MFC to use depending on the target gas flow requested.

5.4.1. GENERATE → AUTO: BASIC GENERATION OF CALIBRATION MIXTURES

This is the simplest procedure for generating calibration gas mixtures. In this mode, the user makes three choices:

- The type of component gas to be used from the list of gases input during initial set up (see Section 3.3.8);
- The target concentration, and;
- The **TOTAL FLOW** to be output by the T700H.

Using this information, the T700H calibrator automatically calculates and sets the individual flow rates for the Diluent and chosen component gases to create the desired calibration mixture.

To use the **GENERATE → AUTO** feature, press:

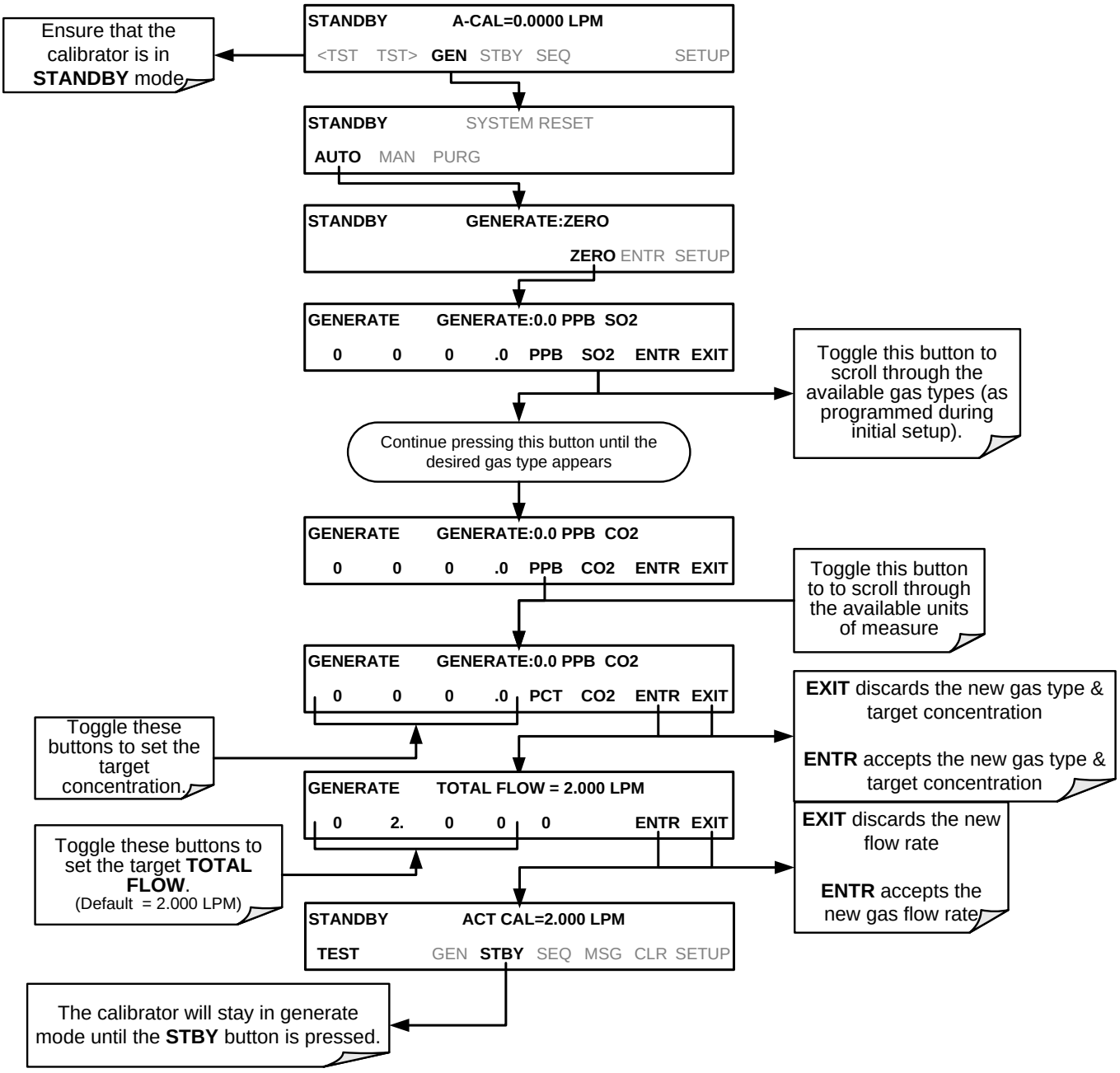
Ensure that the calibrator is in **STANDBY** mode.
STANDBY A-CAL=0.0000 LPM
<TST TST> GEN STBY SEQ SETUP
STANDBY SYSTEM RESET
AUTO MAN PURG
STANDBY GENERATE:ZERO
ZERO ENTR SETUP
GENERATE GENERATE:0.0 PPB SO2
0 0 0 .0 PPB SO2 ENTR EXIT
Toggle this button to scroll through the available gas types (as programmed during initial setup).
Continue pressing this button until the desired gas type appears
GENERATE GENERATE:0.0 PPB CO2
0 0 0 .0 PPB CO2 ENTR EXIT
Toggle this button to to scroll through the available units of measure
GENERATE GENERATE:0.0 PPB CO2
0 0 0 .0 PCT CO2 ENTR EXIT
EXIT discards the new gas type & target concentration
ENTR accepts the new gas type & target concentration
Toggle these buttons to set the target concentration.
GENERATE TOTAL FLOW = 2.000 LPM
0 2. 0 0 0 ENTR EXIT
EXIT discards the new flow rate
ENTR accepts the new gas flow rate
Toggle these buttons to set the target **TOTAL FLOW**.
(Default = 2.000 LPM)
STANDBY ACT CAL=2.000 LPM
TEST GEN STBY SEQ MSG CLR SETUP
The calibrator will stay in generate mode until the **STBY** button is pressed.

5.4.2. GENERATE → ZERO: GENERATING DILUENT

To generate diluent (zero air or nitrogen as input into rear panel DILUENT IN)

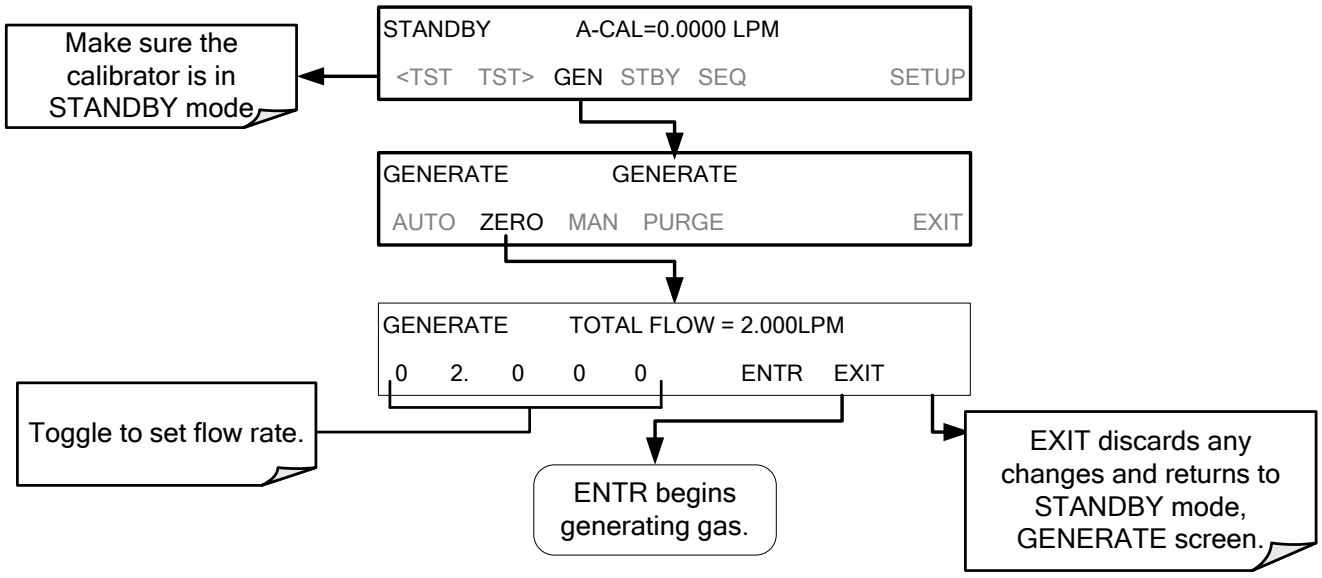

5.4.3. GENERATE → MAN: GENERATING CALIBRATION MIXTURES MANUALLY

This mode provides complete the user with more complete control of the gas mixture process. Unlike the **AUTO** mode, **MAN** mode requires the user set the both the component gas flow rate and diluent airflow rate. This allows the user control over the mixing ratio and total calibration gas flow rate.

If O_3 is to be included in the calibration mixture (e.g. using the GPT or GPTZ features), the user also needs to set the ozone generator mode and set point.

The **TOTAL FLOW** is defined by the user depending on system requirements.

NOTE

- **The minimum total flow should equal 150% of the flow requirements of all of the instruments to which the T700H will be supplying calibration gas.**
- **Example: If the T700H will be expected to supply calibration gas mixtures simultaneously to a system composed of three analyzers each requiring 2 LPM , the proper Total Flow output should be set at:**

(2 + 2 + 2) x 1.5 = 9.000 LPM

5.4.3.1. Determining the Source Gas Flow Rate

To determine the required flow rate of the component source gas use the following formula

Equation 6-1

$$GAS_{flow} = \frac{C_f \times Totalflow}{C_i}$$

WHERE:

C_f = target concentration of diluted gas
C_i = concentration of the source gas
GAS_{flow} = source gas flow rate

EXAMPLE:

- A target concentration of 200 ppm of SO_2 is needed.
- The Concentration of the SO_2 Source is 600 ppm
- The requirement of the system are 9.000 LPM
- The required source gas flow rate would be:

GAS_{flow}= (200 ppm x 9.000 LPM) ÷ 600 ppm
GAS_{flow}= 1800.000 ppm/LPM) ÷ 600 ppm
GAS_{flow}= 3.000 LPM

5.4.3.2. Determining the Diluent Gas Flow Rate

To determine the required flow rate of the diluent gas use the following formula:

Equation 6-2

$$DIL_{flow} = Totalflow - GAS_{flow}$$

WHERE:

GAS_{flow} = source gas flow rate (from Equation 6-1)

Totalflow = total gas flow requirements of the system

DIL_{flow} = required diluent gas flow

EXAMPLE:

- If the requirement of the system is 9.000 LPM,
- The source gas flow rate is set at 3.00 LPM.
- The required source gas flow rate would be:

DIL_{flow} = 9.0 LPM – 3.0 LPM
DIL_{flow} = 6.0 LPM

NOTE

Do NOT set any flow rate to <10% or >100% of the full scale rating of that associated mass flow controller.

FOR T700H'S WITH MULTIPLE CALIBRATIONS MASS FLOW CONTROLLERS INSTALLED.

- **The combined flow potential of both mass flow controllers is available with the following limits:**
  - **The limits are <10% of the lowest rated MFC or >100% of the combined full-scale ratings for both mass flow controllers.**
- **The T700H will automatically select the MFC with the lowest flow rate that can accommodate the requested flow, thereby affording the most precise flow control.**
- **If no single MFC can accommodate the requested flow rate, multiple mass flow controllers are used.**

5.4.3.3. Setting the Source Gas and Diluent Flow Rates Using the GENERATE → MAN Menu

In the following demonstration we will be using the values from the examples given with Equations 6-1 and 6-2 above and assume a T700H calibrator with at least one source gas mass flow controller capable of 3.0 LPM output.

Using the example from Equations 6-1 and 6-2 above, press:

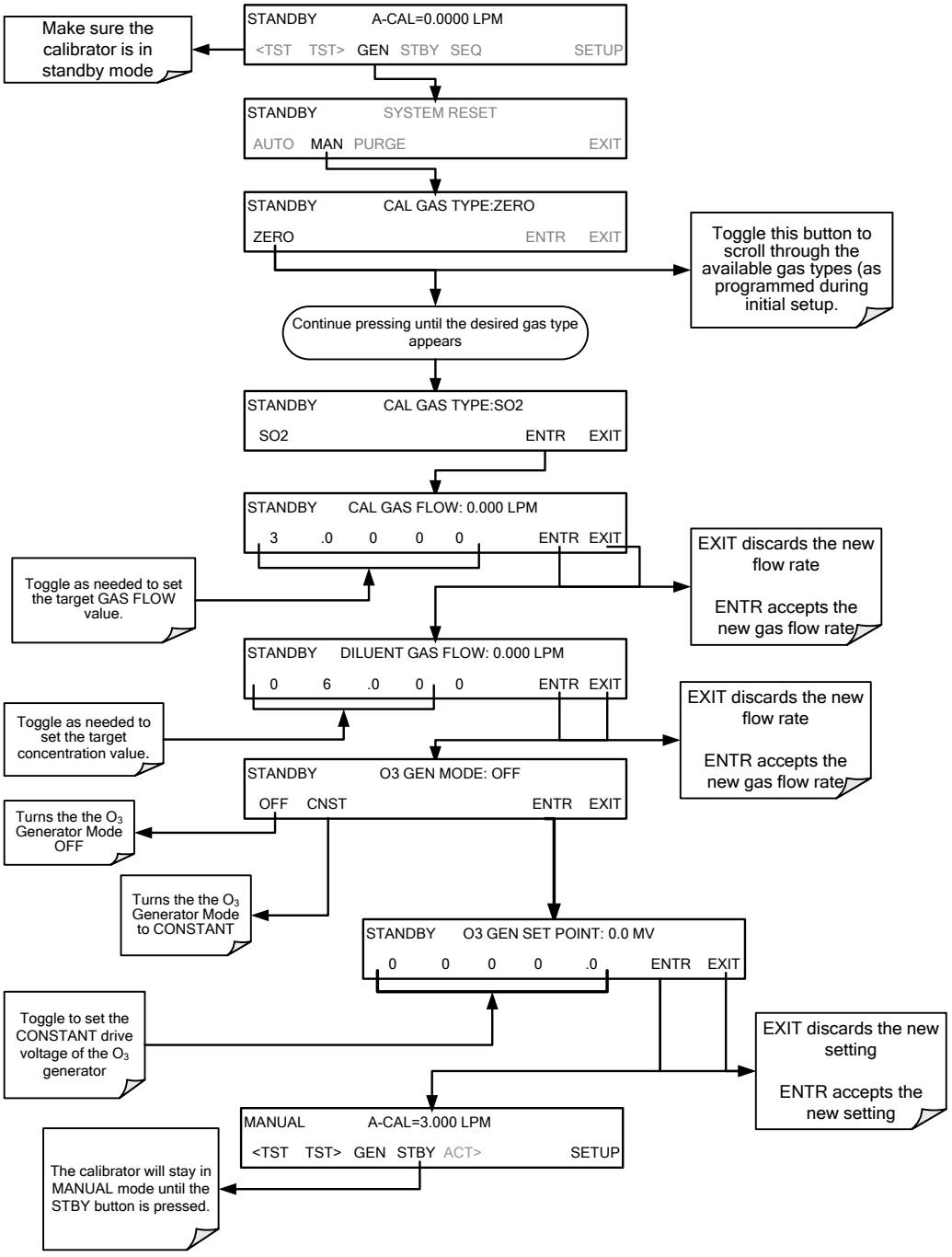

5.4.4. GENERATE → GPTZ: GENERATING GPT FLOW CONDITIONS

GPTZ should be run prior to generating GPT for the purpose of evaluating and calculating the catalytic converter efficiency (CE). GPTZ simulates the flow condition of GPT without generating ozone. This provides accuracy of the NO reading. Refer to Section 5.4.5 for an understanding of GPT.

To initiate GPTZ gas generation you will need to know:

- NO source gas concentration
- Target O_3 concentration (equal to the target NO_2 concentration to be generated)
- TOTAL GAS FLOW for the mixture output

Then, press:

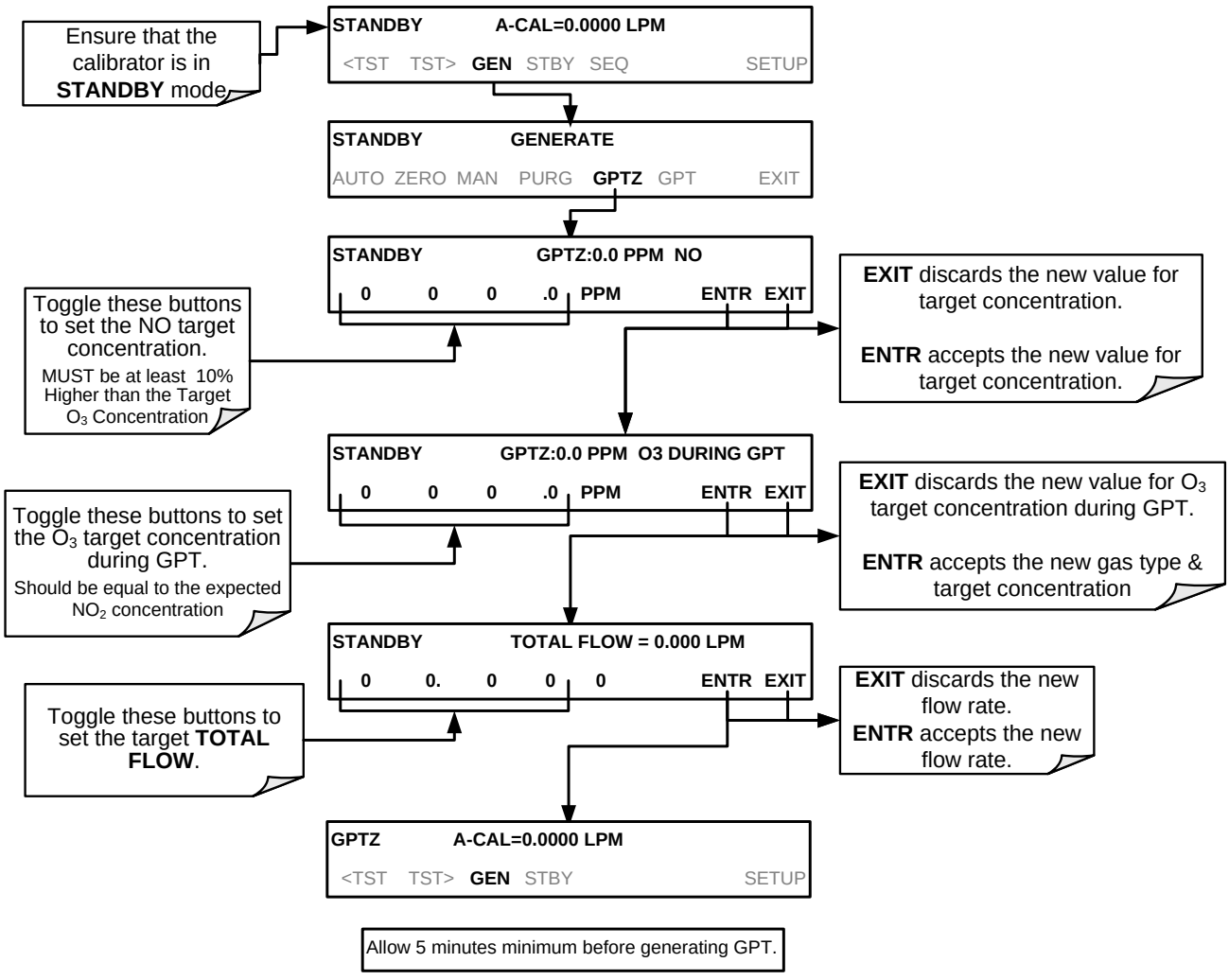

5.4.5. GENERATE → GPT: GENERATING NO_2 USING GAS PHASE TITRATION CALIBRATION

5.4.5.1. GPT Theory

The principle of GPT is based on the rapid gas phase reaction between NO and O_3, which produces quantities of NO_2 as shown by the following equation:

Equation 6-4

$$NO + O_3 \longrightarrow NO_2 + O_2 + h\nu_{(light)}$$

It has been empirically determined that under controlled circumstances the NO-O_3 reaction is very efficient (<1% residual O_3); therefore, the concentration of NO_2 resulting from the mixing of NO and O_3 can be precisely predicted and controlled as long as the following conditions are met:

a) The amount of O_3 used in the mixture is known.

b) The amount of NO used in the mixture is **AT LEAST** 10% greater than the amount of O_3 in the mixture.

c) The volume of the mixing chamber is adequate to allow a complete reaction between NO and O_3.

Given the above conditions, the amount of NO_2 being output by the T700H will be equal to (at a 1:1 ratio) to the amount of O_3 added.

With the O_3 flow rate of the T700H's O_3 generator being a set fixed value (typically about 0.075 LPM), and the GPT chamber's volume is already known, the next steps are to input the **TOTAL GAS FLOW** requirements, the source concentration of NO, and the target concentration for the O_3 generator. The T700H then adjusts the NO flow rate and diluent (nitrogen) flow rate to create the appropriate NO_2 concentration at the output.

5.4.5.2. Choosing an Input Concentration for the NO during GPT

It is important to ensure that there is enough NO in the GPT chamber to use up all of the O_3. Otherwise excess O_3 will react with the resulting NO_2 to produce NO_3. Since NO_3 is undetectable by most NO_x analyzers, this will result in false low readings.

The EPA requires that the NO content of a GPT mixture be at least 10% to 20% higher than the O_3 content. Since there is no negative effect to having too much NO in the GPT chamber, TAPI recommends that the NO concentration be chosen to be some value higher (as much as twice as high) as the highest intended target NO_2 value and kept constant.

As long as the flow rate is also kept constant three of the four conditions listed in Section 5.4.5.1 above are therefore constant and the NO_2 output can be easily and reliably varied by simply changing the O_3 concentration.

EXAMPLE:

Generating 80 ppm of NO_2 require at less 88 ppm of NO gas input concentration.

5.4.5.3. Determining the TOTAL FLOW for GPT Calibration Mixtures

The total flow rate is defined by the user depending on system requirements and the concentration of O_3 that will be requested.

It is very important to keep in mind while performing GPT to produce NO_2, the product of the NO_2 concentration and the total flow cannot exceed 400 PPM.LPM or be less than 10 PPM LPM.

Therefore, mathematically the equation for **maximum** would be:

NO_2 concentration (PPM) X Total Flow (LPM) ≤ 400 PPM • LPM

EXAMPLE 1: to generate **100 PPM** of NO_2 you will be limited to a maximum flow of 4LPM:

100PPM x 4LPM ≤ 400 PPM LPM

EXAMPLE 2: to generate **8 LPM** total flow you will be limited to a maximum 50 PPM of NO_2:

50PPM x 8LPM ≤ 400 PPM ≥LPM

The equation for **minimum** would be:

NO_2 concentration (PPM) X Total Flow (LPM) ≥ 10 PPM • LPM

EXAMPLE 1: to generate **5 PPM** of NO_2 you will be limited to a minimum flow of 2 LPM:

5 PPM x 2 LPM ≥ 10 PPM • LPM

EXAMPLE 2: to generate **2 LPM** total flow you will be limited to a maximum 10 PPM of NO_2:

5 PPM x 2 LPM ≥ 10 PPM • LPM

To ensure an adequate supply of calibration gas, the minimum total flow should also equal at least 150% of the flow requirements of all of the instruments to which the T700H will be supplying calibration gas.

EXAMPLE: If the T700H is will be expected to supply calibration gas mixtures simultaneously to a system in composed of three analyzers each requiring 2 LPM, the proper Total Flow output should be set at:

(2 + 2 + 2) x 1.5 = 9.000 LPM

NOTE

Do NOT set any flow rate to <10% or >100% of the full scale rating of the associated mass flow controller.

FOR T700H'S WITH MULTIPLE CALIBRATIONS MASS FLOW CONTROLLERS INSTALLED:

The full combined flow potential of both mass flow controllers must beused with the following limits:

- **The limits are <10% of the lowest rated MFC or >100% of the combined full-scale ratings for both MFCs**
- **The T700H will automatically select the MFC with the lowest flow rate that can accommodate the requested flow, thereby affording the most precise flow control.**
- **If no single MFC can accommodate the requested flow rate, multiple mass flow controllers are used.**

Given this information, the T700H calibrator determines the NO gas flow by the formula:

Equation 6-5

$$NO\ GAS_{flow} = \frac{C_{NO_2} \times Totalflow}{C_{NO}}$$

WHERE:

C_{NO2} = target concentration for the NO_2 output
C_{NO} = concentration of the NO gas input
$NO\ GAS_{flow}$ = NO source gas flow rate

And the diluent (nitrogen) gas flow by the formula:

Equation 6-6

$$DIL_{flow} = Totalflow - NO\ GAS_{flow} - O_{3flow}$$

WHERE:

GAS_{flow} = source gas flow rate (from Equation 6-1)
Totalflow = total gas flow requirements of the system.
$O_{3\ flow}$ = the flow rate set for the O_3 generator; a constant value (typically about 0.075 LPM)
DIL_{flow} = required diluent gas flow

5.4.5.4. Backpressure Avoidance

Backpressure can build quickly, depending on diameter and length of vent line. The following procedure provides a recommendation for avoiding backpressure in the T700H:

This procedure should be performed with the calibrator installed and connected to the pneumatic system that will normally be used. Also, this procedure should be performed again any time there is a pneumatic configuration change.

1. Connect the supplied pressure gauge to an available rear panel output port on the T700H, in order to monitor the backpressure.
2. Due to the pressure sensitivity of the ozone generator, ensure that the pressure gauge reading does not exceed 2 psi during the GPT function.
3. Make the appropriate adjustments to keep the backpressure below 2 psi.

5.4.5.5. T700H Calibrator GPT Operation

The following table and figure show the status of the T700H's internal pneumatic components and internal gas flow when the instrument is in **GPT** generating mode.

Table 5-5: Status of Internal Pneumatics During GENERATE → GPT Mode

MODE	VALVES (X = Closed; O = Open)							MFCs		
	CYL 1	CYL 2	CYL 3	CYL 4	PURGE	DILUENT	O_3 GEN	CAL1	CAL2[1]	DILUENT
GPT	O[2]	O[2]	O[2]	O[2]	X	O	O	ON[3]	ON[3]	ON

[1] Only present when additional cal gas MFC option is installed.

[2] The valve associated with the cylinder containing NO source gas is open.

[3] In instrument with multiple MFCs the CPU chooses which MFC to use depending on the target gas flow requested.

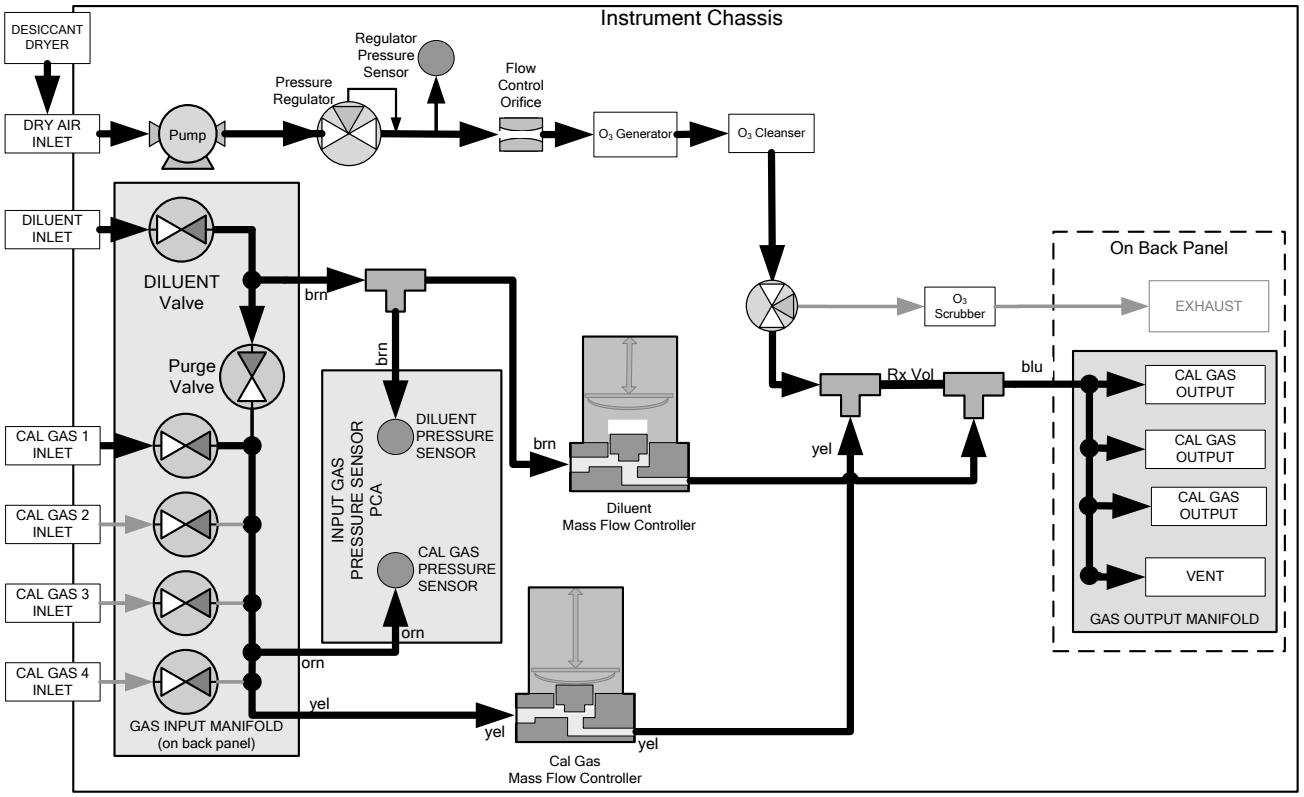

Figure 5-5: Gas Flow through T700H in GPT Mode

5.4.5.6. Initiating and Fine-Tuning (Trimming) a GPT Calibration Gas Generation

To initiate GPT gas generation you will need to know:

- NO source gas concentration
- Target O_3 concentration (equal to the target NO_2 concentration to be generated)
- **TOTAL GAS FLOW** for the mixture output

Then, press:

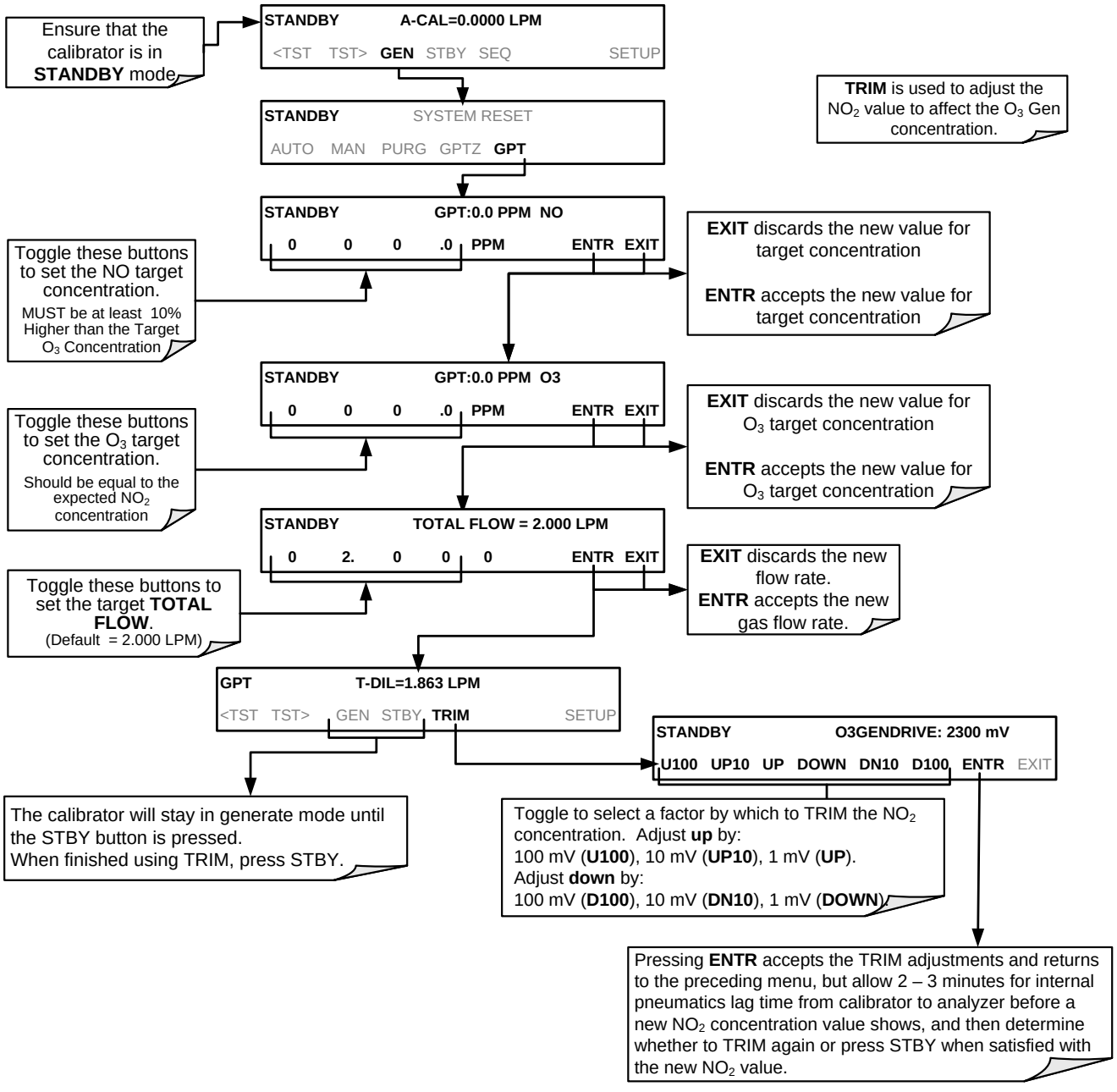

5.4.6. GENERATE → PURGE: ACTIVATING THE PURGE FEATURE

The T700H calibrator's PURGE feature clears residual source gases and calibration gas mixtures generated in the preceding steps, from the instrument's internal pneumatics as well as any external pneumatic lines downstream from the calibrator.

When activated, the **PURGE** feature:

- Opens the Diluent (zero air or nitrogen) inlet valve allowing the diluent gas to flow into the calibrator from its external, pressurized source;
- Adjusts the diluent air mass flow controller (MFC1) to maximum flow;
- Adjusts all of the component gas mass flow controllers installed in the calibrator to maximum flows, 10 SLPM and 100 SCCPM accordingly, to flush out the pneumatic system of the T700H.

The **PURGE** air is vented through the VENT port of the rear panel of the instrument (refer to Figure 3-4).

Table 5-6: Internal Pneumatics During Purge Mode

MODE	VALVES (X = Closed; O = Open)							MFCs		
	CYL 1	CYL 2	CYL 3	CYL 4	PURGE	DILUENT	O_3 GEN	CAL1	CAL2[1]	DILUENT
PURGE	X	X	X	X	O	O	O	ON[3]	ON[2]	ON

[1] Only present when additional cal gas MFC option is installed.

[2] In instrument with multiple MFCs the CPU chooses which MFC to use depending on the target gas flow requested

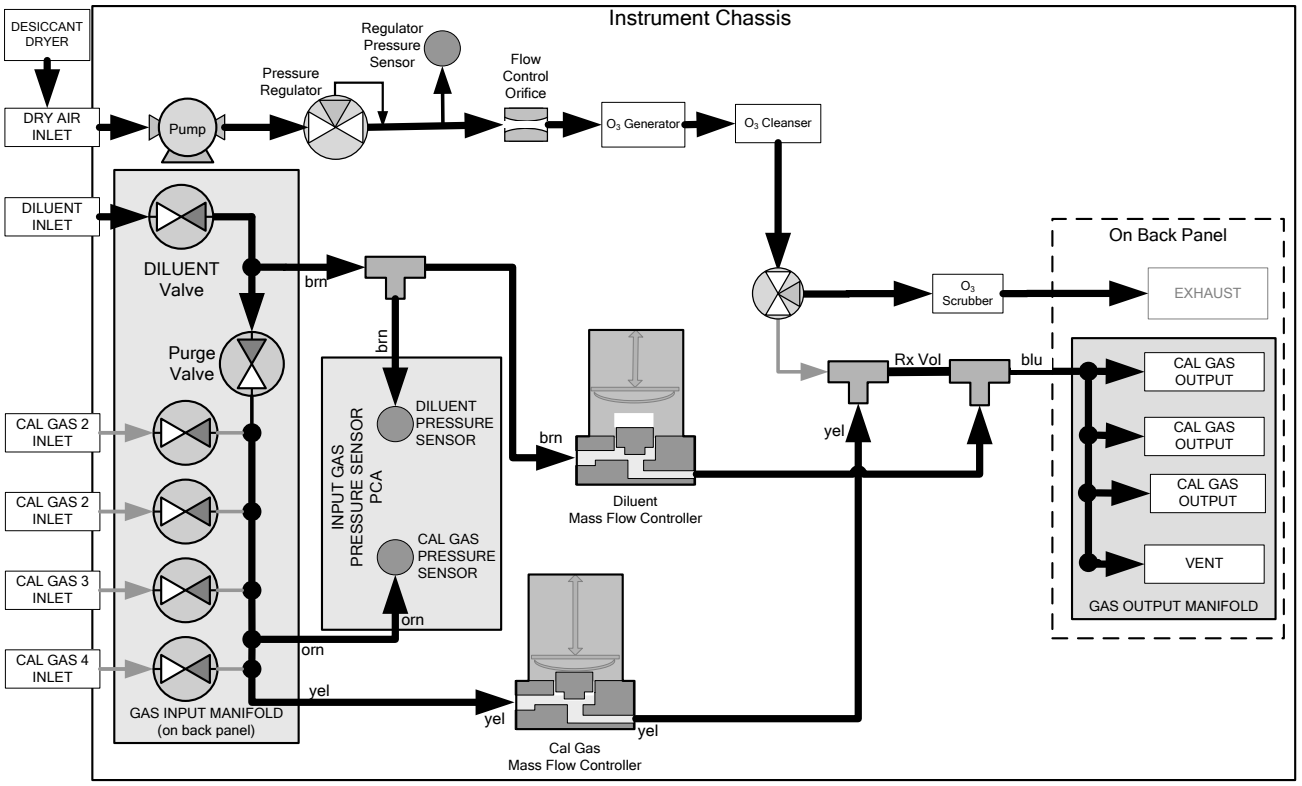

Figure 5-6: Gas Flow through T700H in PURGE Mode

To activate the **PURGE** feature, press:

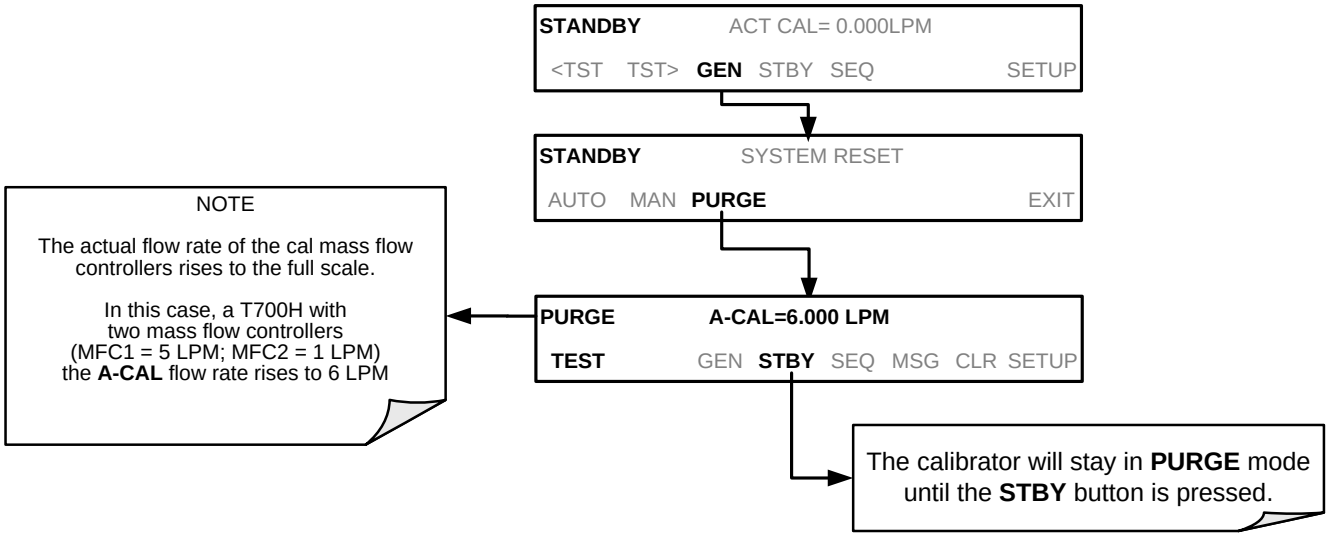

CAUTION

THIS PURGE FEATURE DOES NOT STOP AUTOMATICALLY.

ALLOW ABOUT 5 MINUTES FOR THE RESIDUAL GASES TO BE ADEQUATELY PURGED AND THEN MANUALLY PRESS THE STBY BUTTON TO STOP THE PURGING PROCESS.

5.4.7. GENERATE →ACT>: VIEWING CONCENTRATIONS GENERATED FROM MULTI-GAS CYLINDERS

When a concentration mixture is being generated, using a multiple-gas cylinder as a source the software uses the Diluent and Cal gas flow rates to calculate the actual concentration for each gas in the cylinder so that it is possible to see the concentrations of all of the gases being output by the T700H calibrator.

EXAMPLE: For a cylinder containing a blend of CH_4, NO and NO_2. (NO_2 is a common contaminant present in small quantities in bottles containing NO:

This will display the actual concentration being generated for each gas in the multiple-gas cylinder.

When generating a concentration of one of the two primary gases in the cylinder (e.g. NO or CH_4) using the **GEN → AUTO**, **GEN → MANUAL** buttons or a preprogrammed calibration **SEQUENCE**, press:

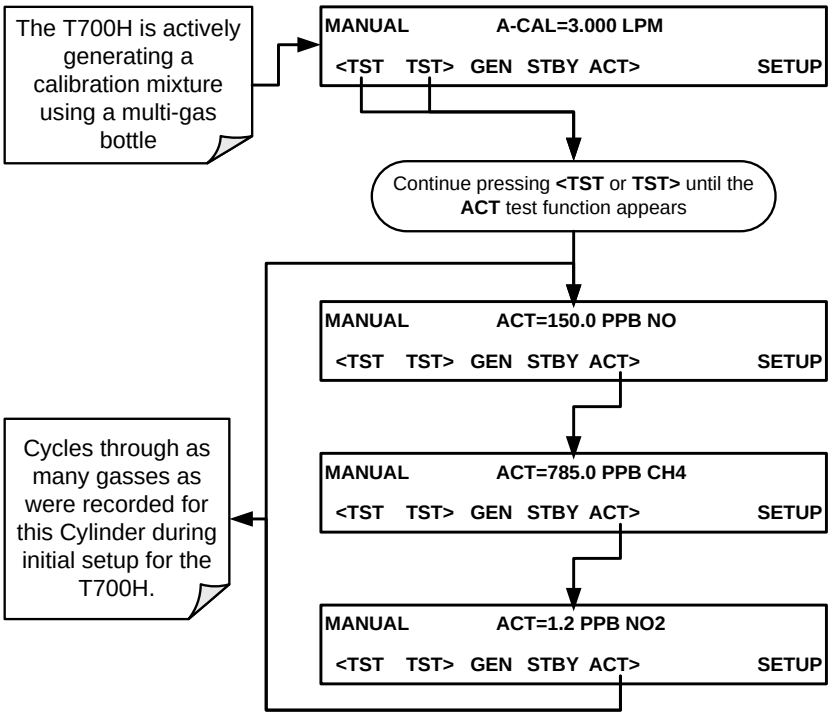

NOTE

If the ACT> button only appears if the T700H is generating gas from a multiple-gas cylinder.

For NO cylinders, the instrument will only display the amount of NO_2 in the calibration mixture if the concentration of NO_2 present in the bottle is known and was programmed into the bottle's definition (see Section 3.3.8).

5.5. AUTOMATIC CALIBRATION SEQUENCES

The T700H calibrator can be set up to perform automatic calibration sequences of multiple steps. These sequences can perform all of the calibration mixture operations available for manual operation and can be initiated by one of the following methods:

- front panel touch screen buttons
- internal timer,
- external digital control inputs
- RS-232 interface
- Ethernet interface
- sub-processes in another sequence

5.5.1. SETUP → SEQ: PROGRAMMING CALIBRATION SEQUENCES

A sequence is a database of single or multiple steps where each single step is an instruction that causes the instrument to perform an operation. These steps are grouped under a user defined SEQUENCE NAME.

For each sequence, there are seven attributes that must be programmed. They attributes are listed in Table 5-7.

Table 5-7: Automatic Calibration SEQUENCE Set Up Attributes

ATTRIBUTE NAME	DESCRIPTION
NAME	Allows the user to create a text string of up to 10 characters identifying the sequence.
REPEAT COUNT	Number of times, between 0 and 100, to execute the same sequence. A value of 0 (zero) causes the sequence to execute indefinitely.
CC INPUT	Specifies which of the T700H's Digital Control Inputs will initiate the sequence.
CC OUTPUT	Specifies which of the T700H's Digital Control Outputs will be set when the sequence is active.
TIMER ENABLE	Enables or disables an internal automatic timer that can initiate sequences using the T700H's built in clock.
STEPS	A series of submenus for programming the activities and instructions that make up the calibration sequence.
PROGRESS MODE	Allows the user to select the reporting style the calibrator uses to report the progress of the sequences , on the front panels display, as it runs

The types of instruction steps available for creating calibration sequences are listed in Table 5-8.

Table 5-8: Calibration SEQUENCE Step Instruction

INSTRUCTION NAME	DESCRIPTION
GENERATE	Puts the instrument into **GENERATE** mode. Similar in operation and effect to the **GENERATE → AUTO** function used at the front panel.
GPT	Initiates a Gas Phase Titration operation.
GPTZ	Initiates a Gas Phase Titration Zero (baseline NO) procedure.
PURGE	Puts the calibrator into **PURGE** mode.
DURATION	Adds a period of time between the previous instruction and the next
EXECSEQ	Calls another sequence to be executed at this time. The calling sequence will resume running when the called sequence is completed. Up to 5 levels of nested sequences can be programmed.
SETCCOUTPUT	Allows the sequence to activate the T700H's digital control outputs. Similar to the CC OUPUT attribute, but can be set and reset by individual steps.
MANUAL	Puts the instrument into **GENERATE** mode. Similar in operation and effect to the **GENERATE → MAN** function used at the front panel.

NOTE

It is generally a good idea to end each calibration sequence with a PURGE instruction followed by an instruction to return the instrument to STANDBY mode.

Even if a PURGE is not included, the last instruction in a sequence should always be an instruction placing the T700H into STANDBY mode.

To create a sequence, use the instructions in the following sections to name the sequence, set its associated parameters and define the steps to be included.

5.5.1.1. Activating a Sequence from the T700H Front Panel

To activate an already programmed sequence from the front panel, press:

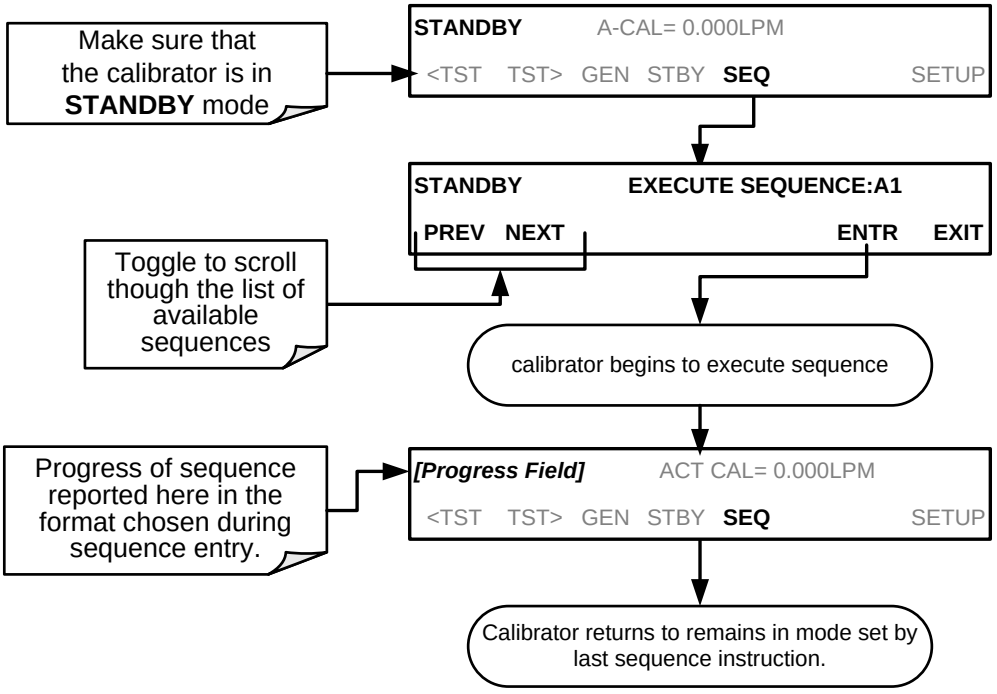

5.5.1.2. Naming a Sequence

The first step of creating a calibration sequence is to assign it a name. The name can be up to 10 characters and can be comprised of any alpha character (A to Z), and numeral (0 to 9) or the underscore character ("_").

To assign a name to a sequence, press:

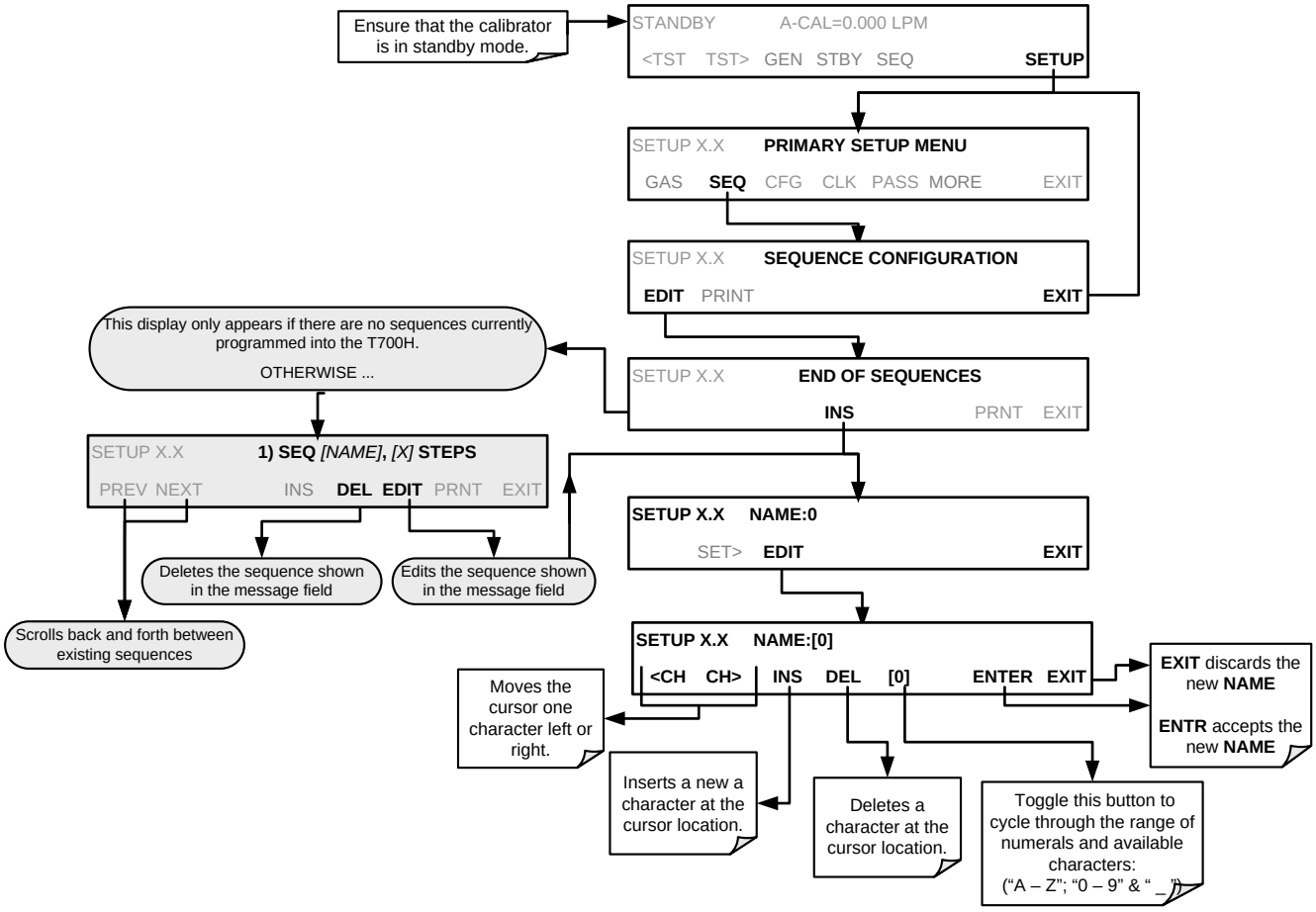

5.5.1.3. Setting the Repeat Count for a Sequence

The sequence can be set to repeat a certain number of times, from 1 to 100. It can also be set to repeat indefinitely by inputting a zero (0) into the **REPEAT COUNTER**.

To set the **REPEAT COUNTER**, press:

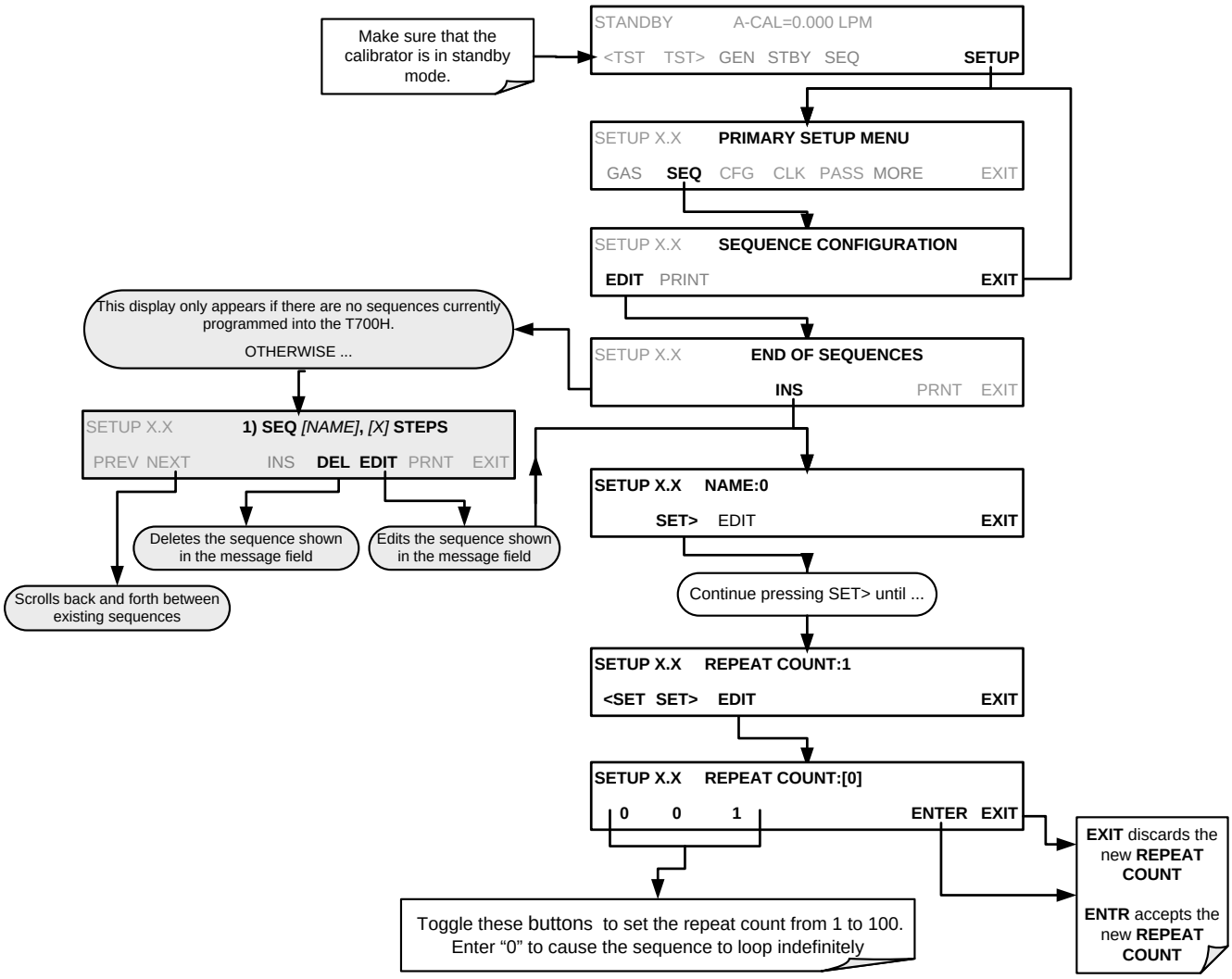

5.5.1.4. Using the T700H's Internal Clock to Trigger Sequences

Sequences can be set to trigger based on the T700H's internal clock. The sequence can be set up to start at a predetermined date and time. It can also be set to repeat after a predetermined delay time.

To activate and sequence timer, press:

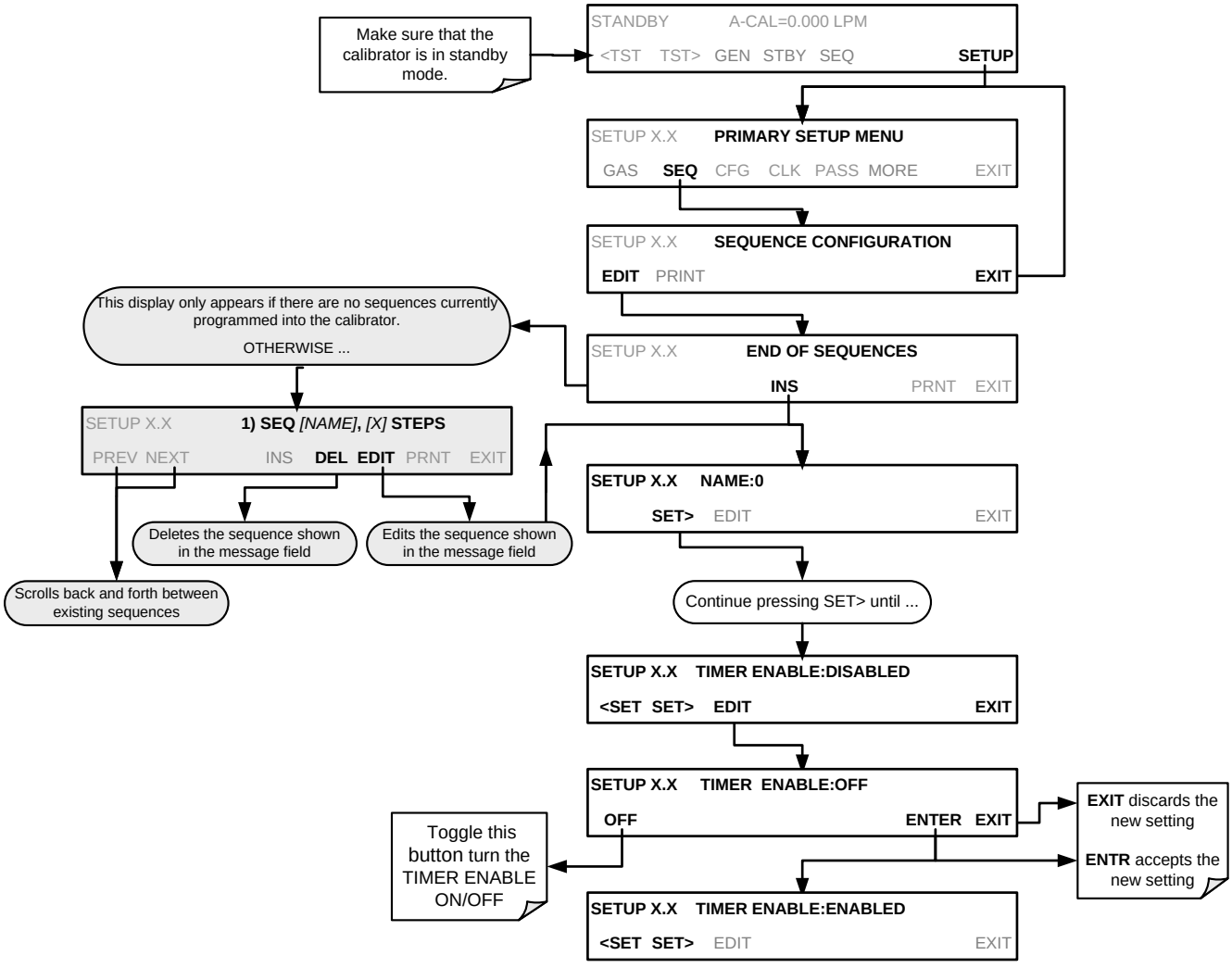

To specify a starting date and time for the sequence, press:

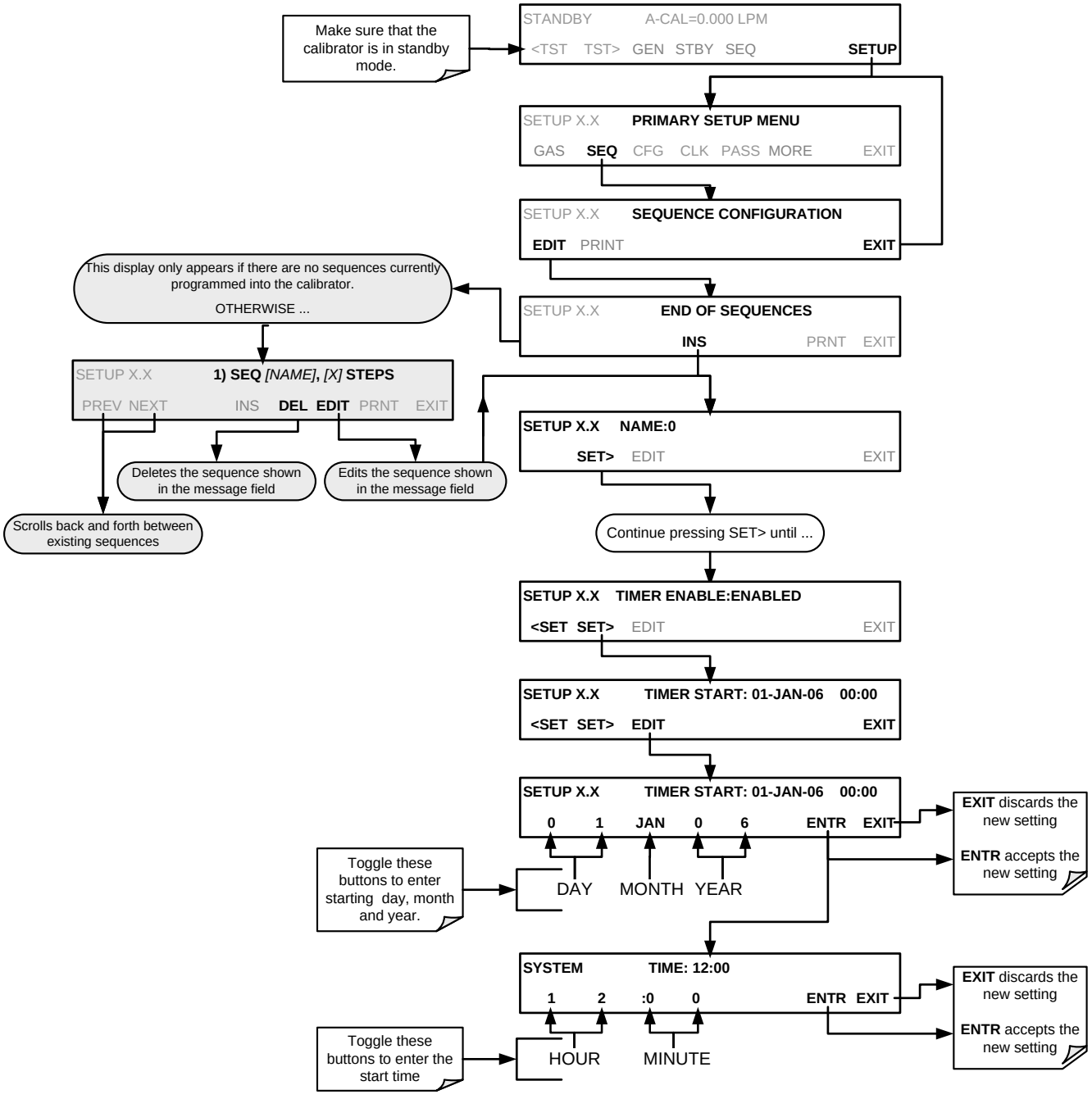

To set the delta timer, press:

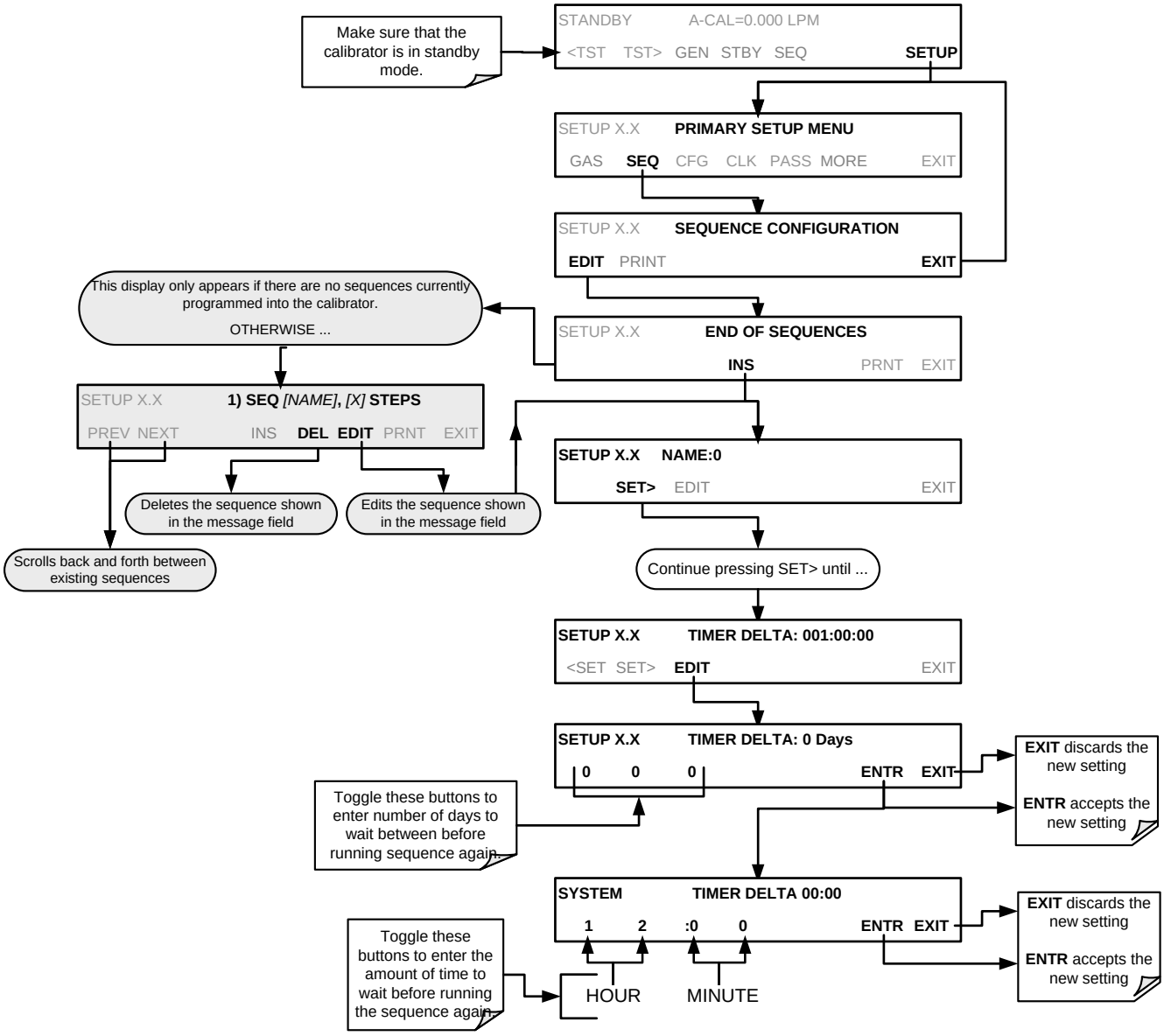

5.5.1.5. Setting Up Control Inputs for a Sequence

The T700H calibrator's control inputs allow the entire sequence to be triggered from an external source. This feature allows the calibrator to operate in a slave mode so that external control sources, such as a data logger can initiate the calibration sequences.

Each of the T700H calibrator's control outputs is located on the back of the instrument (refer to Figure 3-4).

- 12 separate ON/OFF switches assigned to separate calibration sequences or;
- A 12-bit wide bus allowing the user to define activation codes for up to 4095 separate calibration sequences.

To assign a **CC INPUT** pattern/code to a particular sequence, press:

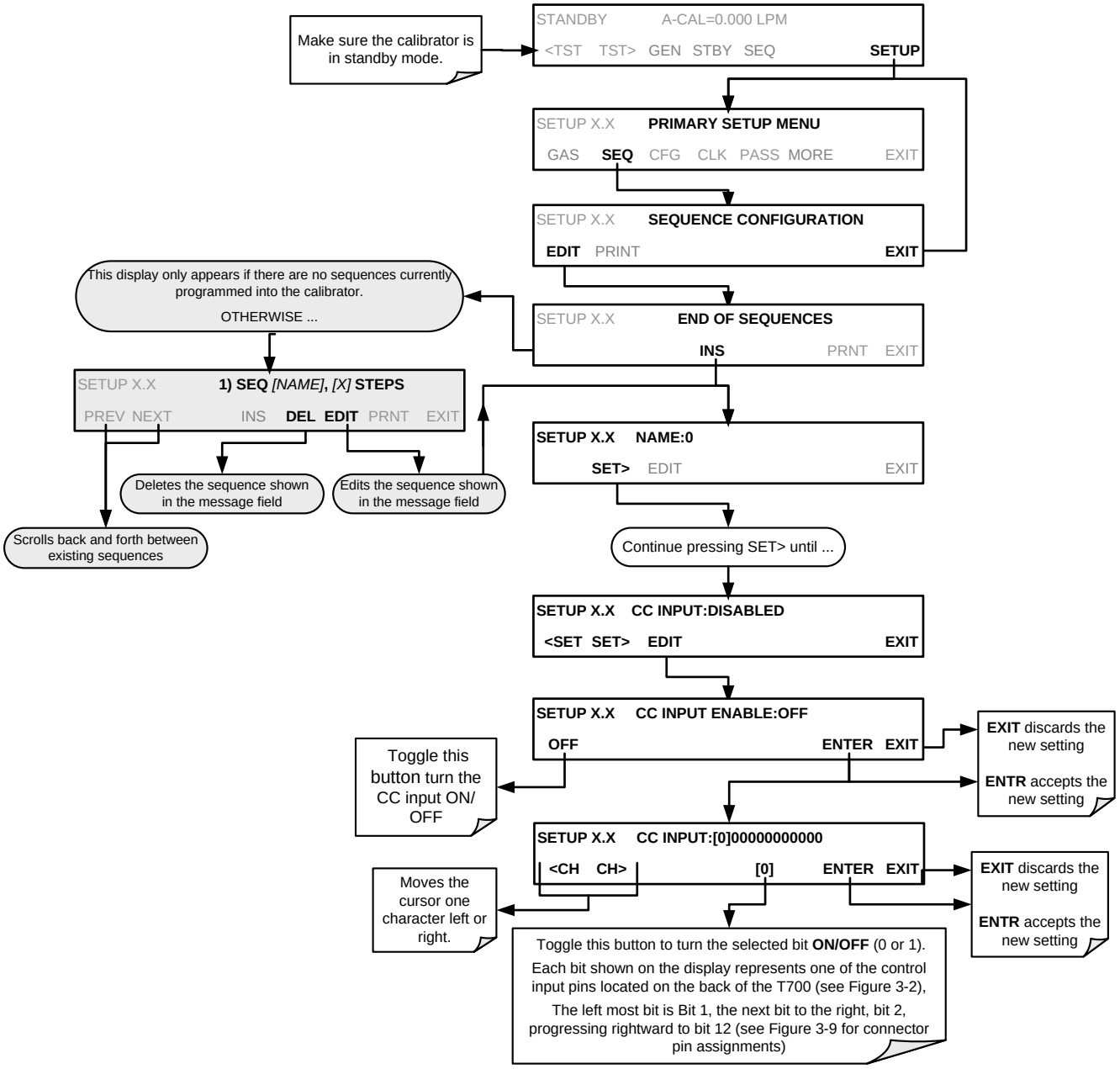

5.5.1.6. Setting Up Control Outputs for a Sequence

The T700H calibrator's control outputs allow the calibrator to control devices that accept logic-level digital inputs, such as programmable logic controllers (PLCs), data loggers, or digital relays/valve drivers.

They can be used as:

- 12 separate ON/OFF switches assigned to separate calibration sequences, or;
- A 12-bit wide bus allowing the user to define activation codes for up to 4095 separate calibration sequences.

They can be set to:

- Be active whenever a particular calibration sequence is operating, or;
- Activate/deactivate as individual steps within a calibration sequence are run (see Section 5.5.2.8).

To assign a **CC OUTPUT** pattern/code to a particular sequence, press:

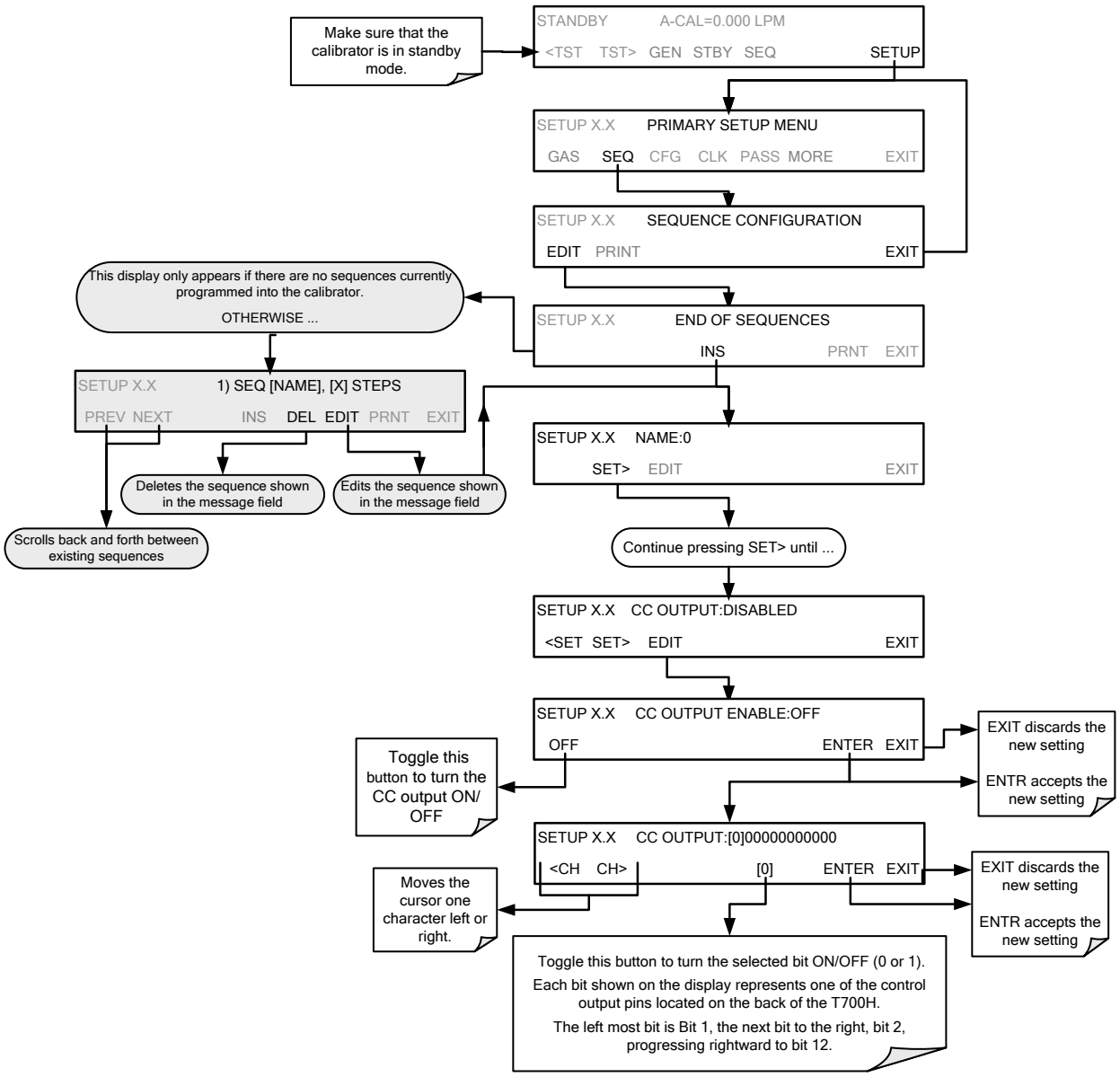

5.5.1.7. Setting the PROGRESS Reporting Mode for the Sequences

As sequences run, the T700H calibrator reports progress by displaying a message in the MODE field of the front panel display (See Figure 3-1). There are several types of report modes available (see Table 5-9).

Table 5-9: Sequence Progress Reporting Mode

MODE	DESCRIPTION
STEP	• Shows the progress as the sequence name and step number. This is the traditional display. Example: "SO2_Test-2".
PCT	• Shows the progress as a percent (0–100%) of the total sequence duration. Example: "SEQ 48%"
ELAP	• Shows the progress as days, hours, minutes and seconds elapsed, counting from 0. Example (<1 day): "T+01:30:25" (i.e. 1 hour, 30 minutes, 25 seconds elapsed) Example (>=1 day): "T+1d30:25" (i.e. 1 day, 30 hours, 25 minutes elapsed)
REM	• Shows the progress as days, hours, minutes, and seconds remaining, counting down to 0. Example (<1 day): "T–01:30:25" (i.e. 1 hour, 30 minutes, 25 seconds remaining) Example (>=1 day): "T–1d30:25" (i.e. 1 day, 30 hours, 25 minutes remaining)

To select a PROGRESS report mode, press:

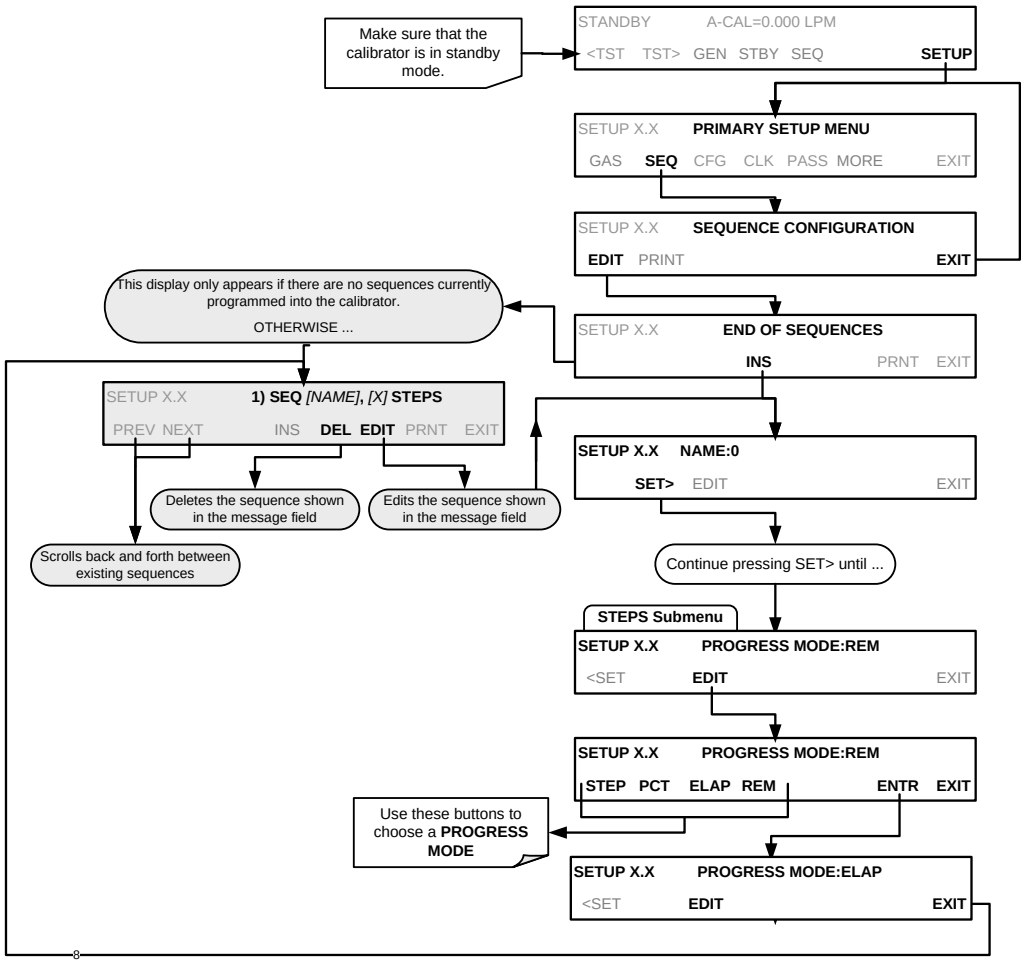

5.5.2. ADDING SEQUENCE STEPS

To insert an instruction step into a sequence, navigate to the **INSERT STEP** submenu by pressing:

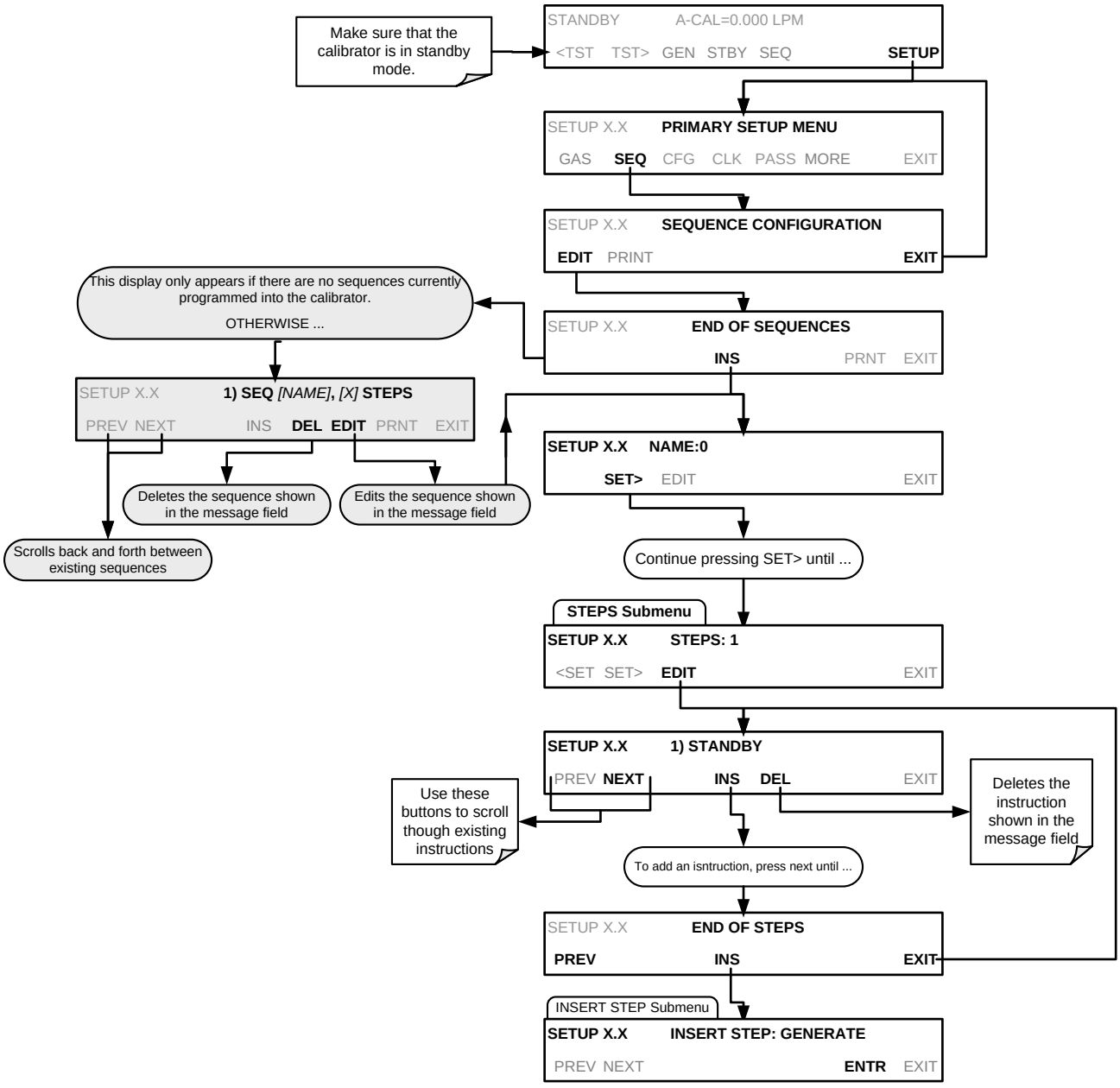

5.5.2.1. The GENERATE Step

This step operates and is programmed similarly to the **GENERATE → AUTO.**

At the end of the programming sequence, the T700H firmware will automatically insert a **DURATION** step that needs to be defined.

To insert a **GENERATE** step into a sequence, press:

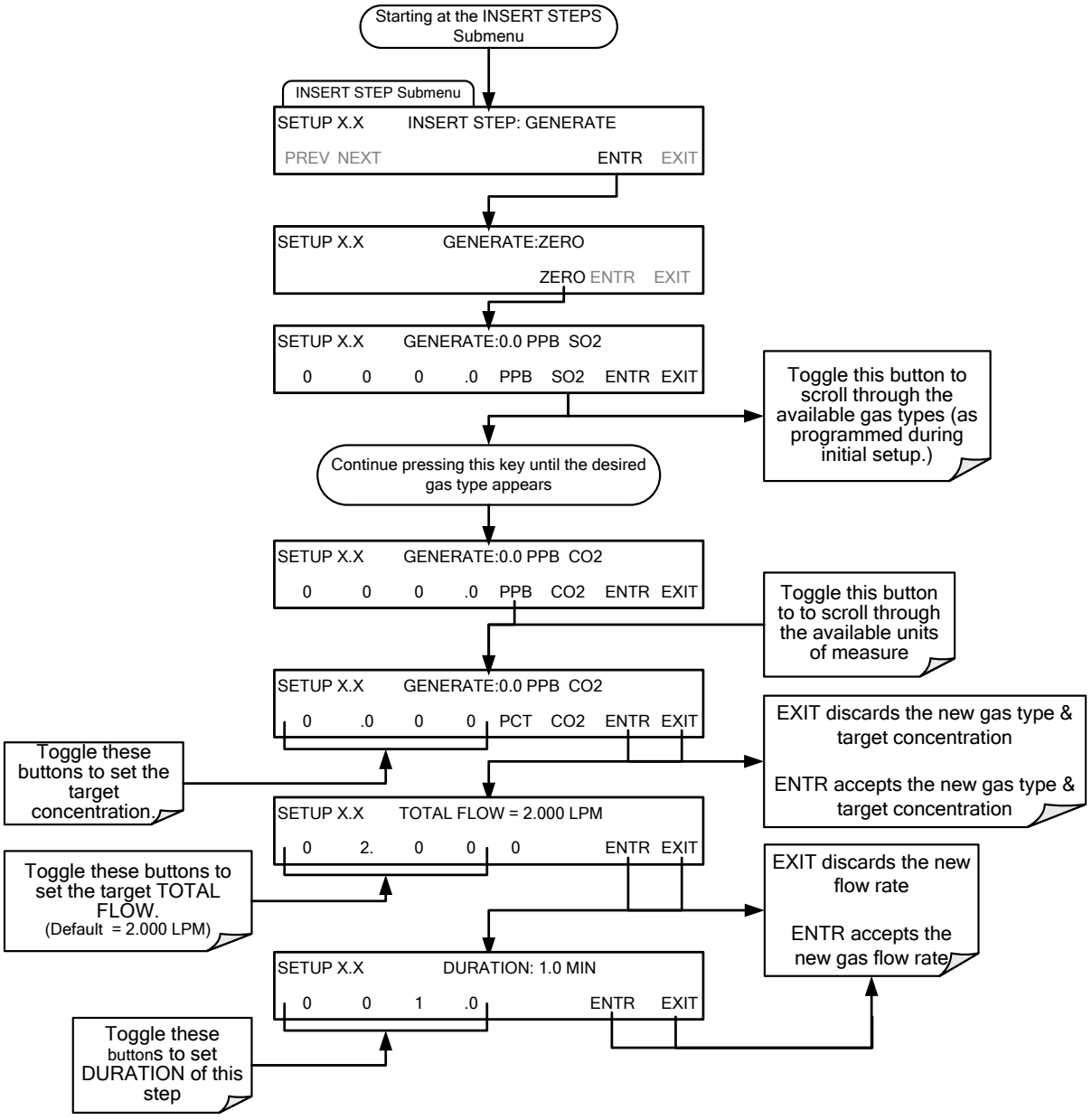

NOTE

If the user attempts to generate a source gas type that has not been entered into the T700H's gas library, the sequence will freeze and after a certain time-out period, stop running. Press EXIT and add the gas type via the SETUP>GAS menu.

5.5.2.2. The GPT Step

This step operates and is programmed similarly to the **GENERATE →GPT** (see Section 5.4.4 for information on choosing the correct input values for this step)**.**

At the end of the programming sequence, the T700H firmware will automatically insert a **DURATION** step that needs to be defined.

To insert a **GPT** step into a sequence, press:

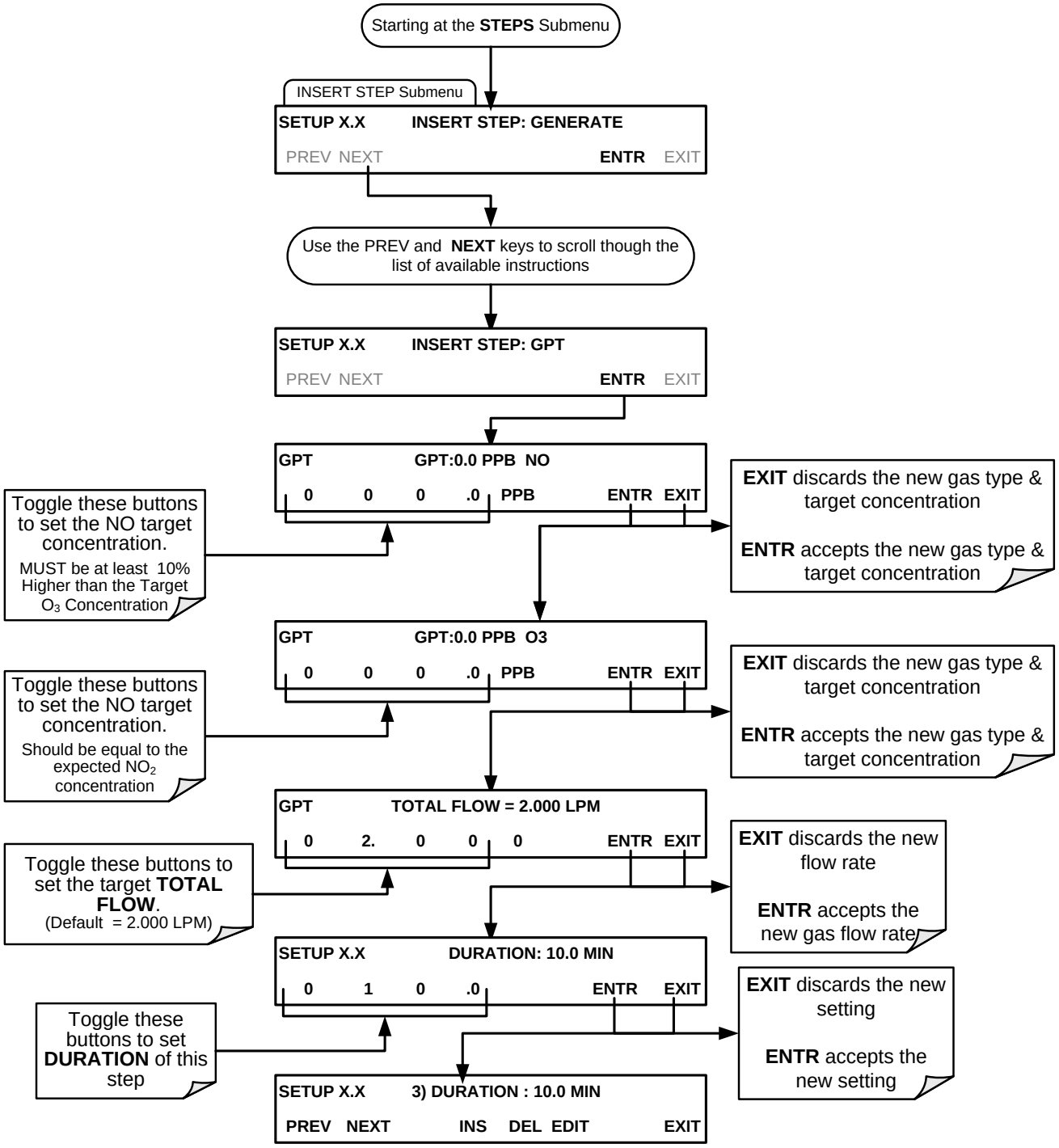

5.5.2.3. The GPTZ Step

This step operates and is programmed similarly to the **GENERATE →GPT** (see Section 5.4.4 for information on choosing the correct input values for this step)**.**

At the end of the programming sequence, the T700H firmware will automatically insert a **DURATION** step that needs to be defined.

To insert a **GPTZ** step into a sequence, press:

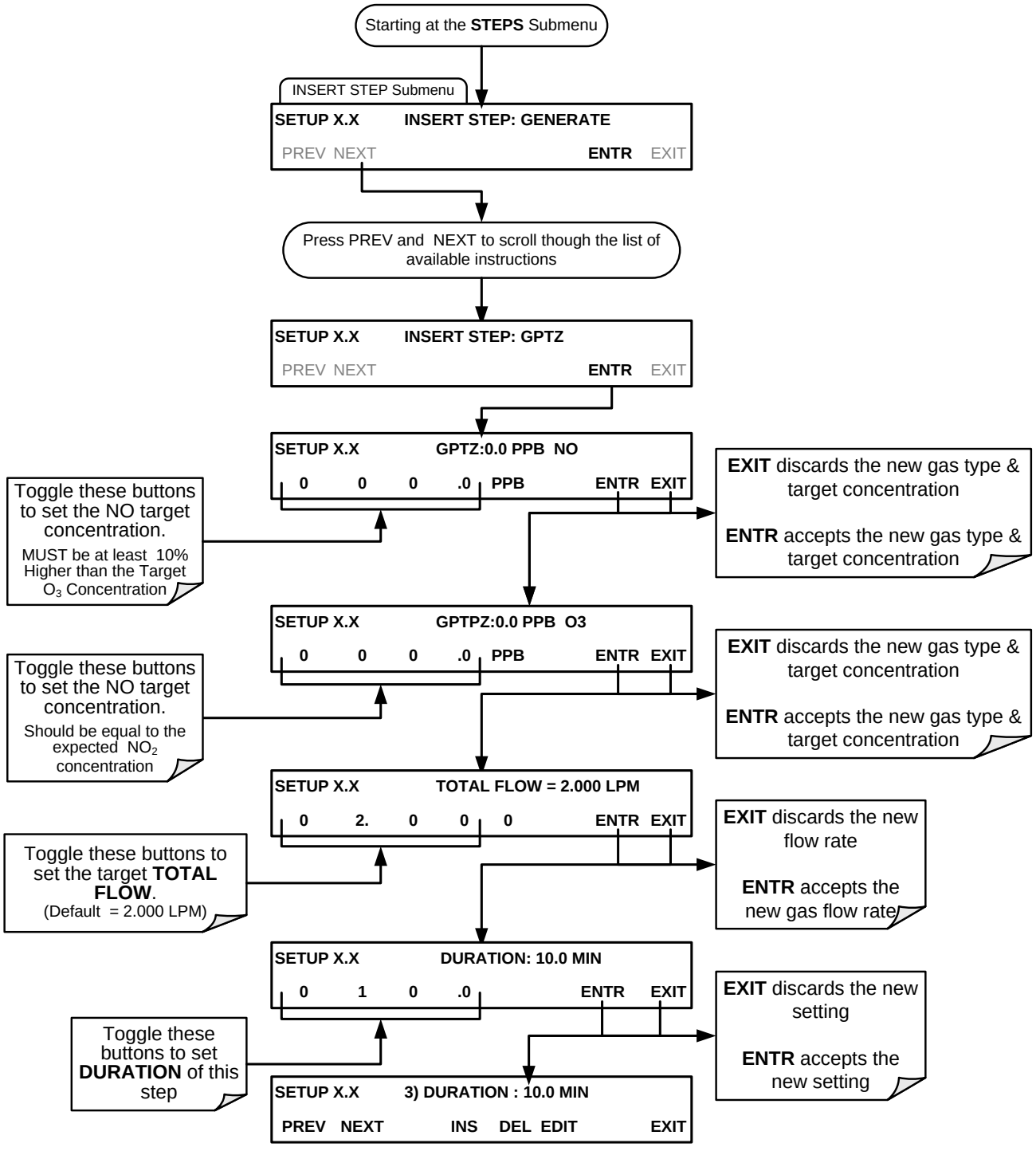

5.5.2.4. The PURGE Step

This step places the T700H into **PURGE** mode.

At the end of the programming sequence, the T700H firmware will automatically insert a **DURATION** step that needs to be defined.

To insert a **PURGE** step into a sequence, press:

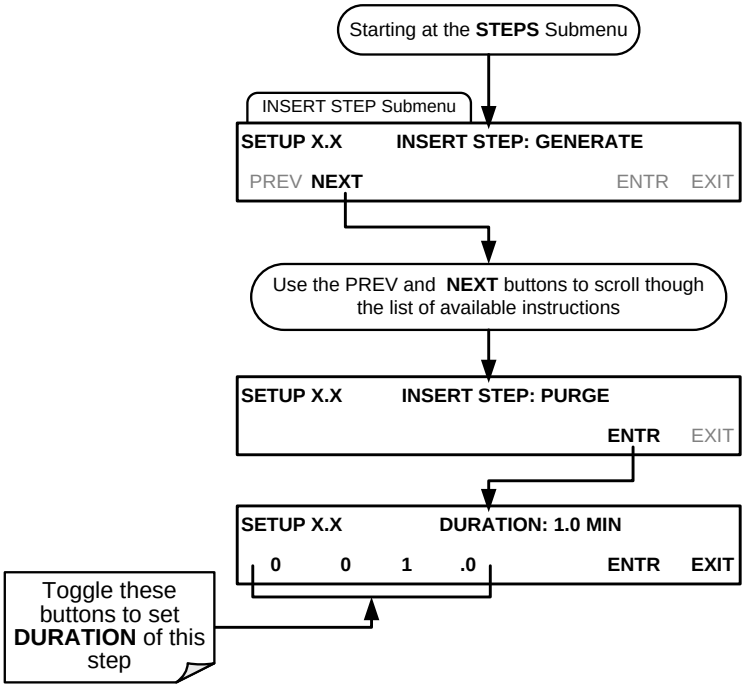

5.5.2.5. The STANDBY Step

The **STANDBY** step places the T700H into **STANDBY** mode. It is recommended, but not required to follow this with a **DURATION** step.

To insert a **STANDBY** step into a sequence, press:

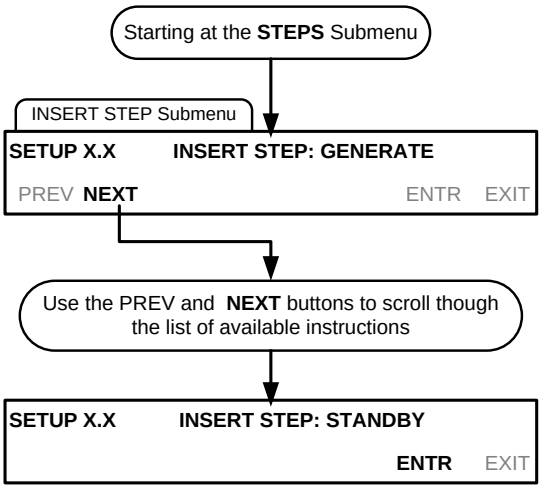

5.5.2.6. The DURATION Step

The duration step causes the T700H to continue performing whatever action was called for by the preceding step of the sequence.

- If that step put the instrument into **STANDBY** mode, the calibrator stays in **STANDBY** mode for the period specified by the **DURATION** step,
- If that step put the instrument into **GENERATE** mode, the calibrator will continue to **GENERATE** whatever calibration mixture was programmed into that step for the period specified by the **DURATION** step.

To insert a **DURATION** step into a sequence, press:

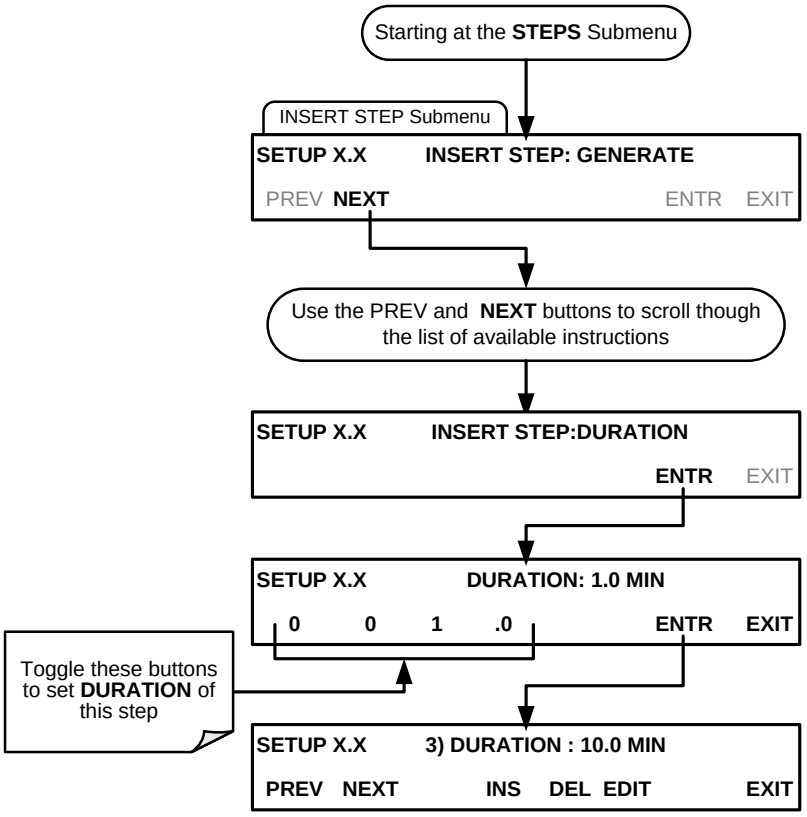

5.5.2.7. The EXECSEQ Step

The **EXECSEQ** step allows the sequence to call another, already programmed sequence. This is a very powerful tool in that it allows the user to create a "toolbox" of often-used operations that can then be mixed and matched by an overhead sequence.

To insert an **EXECSEQ** step into a sequence, press:

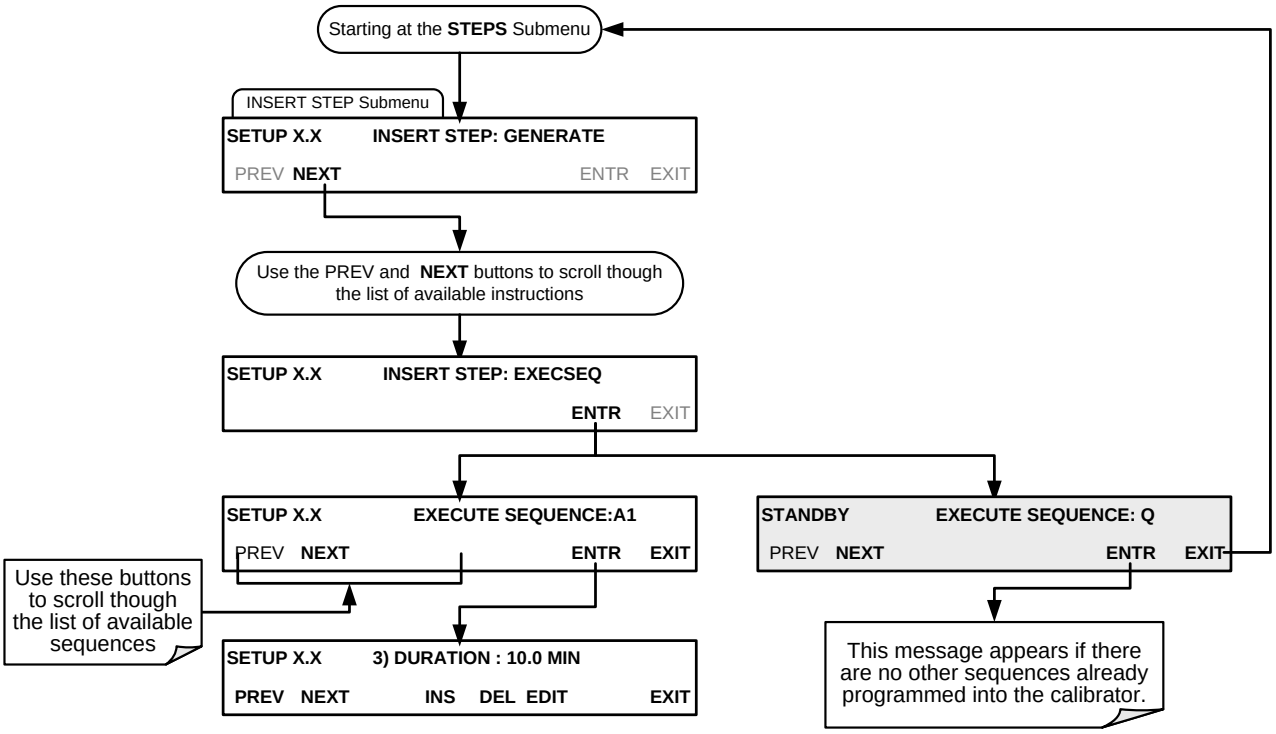

5.5.2.8. The CC OUTPUT Step

This instruction causes the sequence to set or reset the T700H's digital control outputs. It is very useful in situations where the control outputs are being used to trigger other devices that need to be turned off and on in synch with the operation of the calibrator as it progress through the sequence.

To insert a **CC OUTPUT** step into a sequence, press:

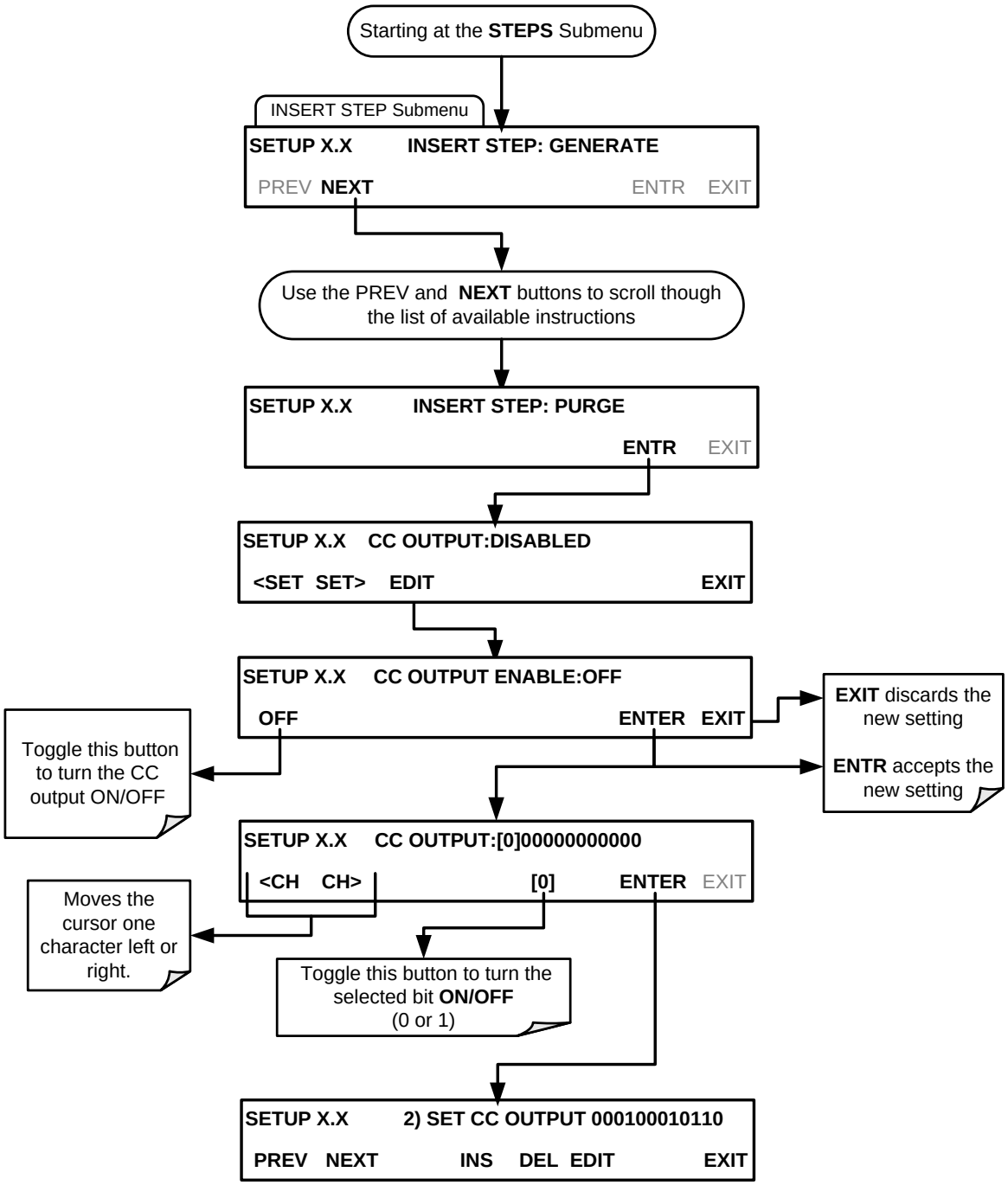

5.5.2.9. The MANUAL Gas Generation Step

The **MANUAL** step causes the T700H calibrator to enter **MANUAL CALIBRATION MODE**. It is programmed in a similar manner to the calibrator's **GENERATE → MANUAL** function. At the end of the programming sequence, the T700H firmware will automatically insert a DURATION step that needs to be defined.

To insert a **MANUAL** step into a sequence, press:

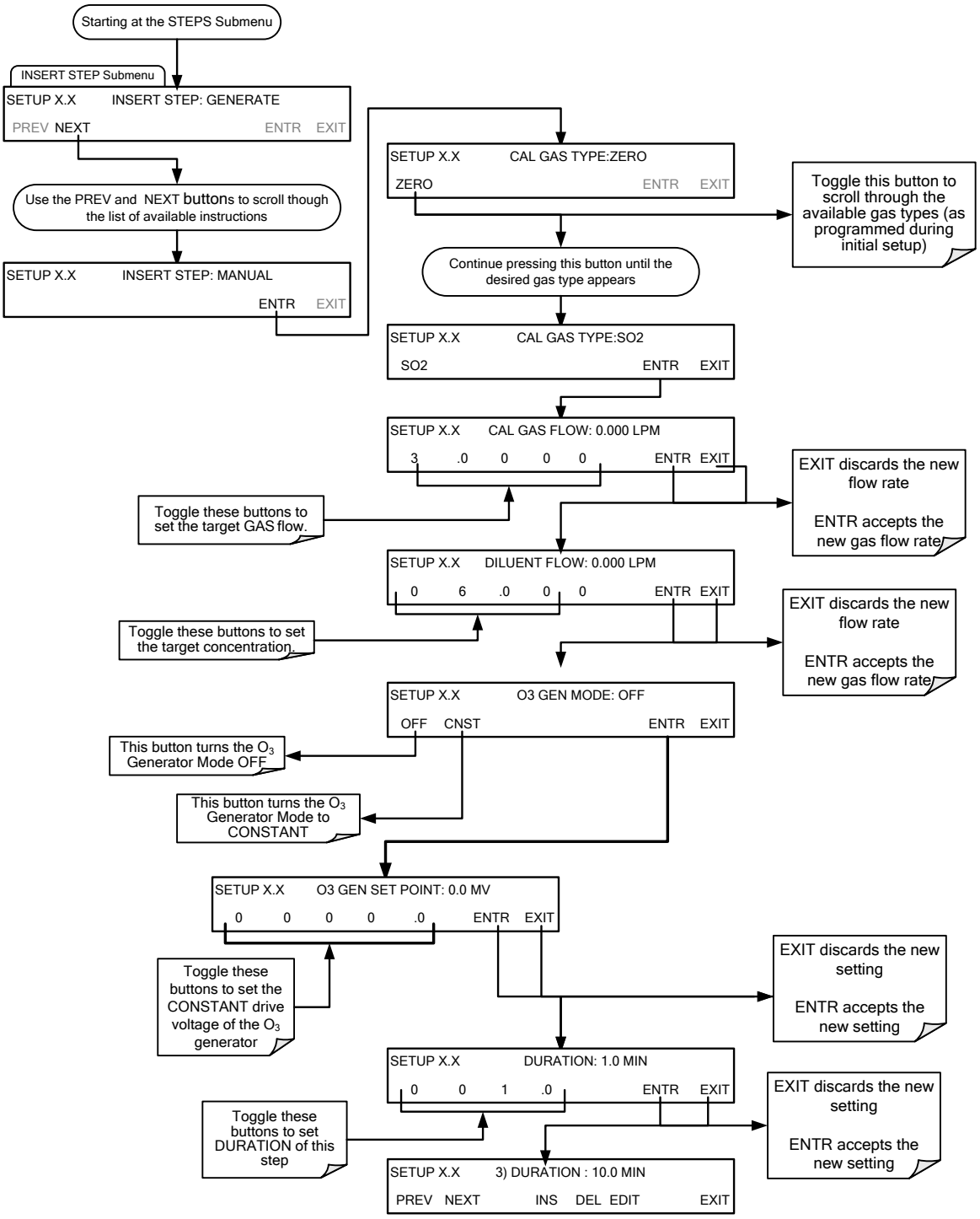

NOTE

If the user attempts to generate a source gas type that has not been entered into the T700H's gas library, the sequence will freeze and after a certain time-out period, stop running. Press EXIT and add the gas type via the SETUP>GAS menu.

5.5.2.10. Deleting or Editing an Individual Step in a Sequence

To delete or edit an individual step in an existing Sequence, press:

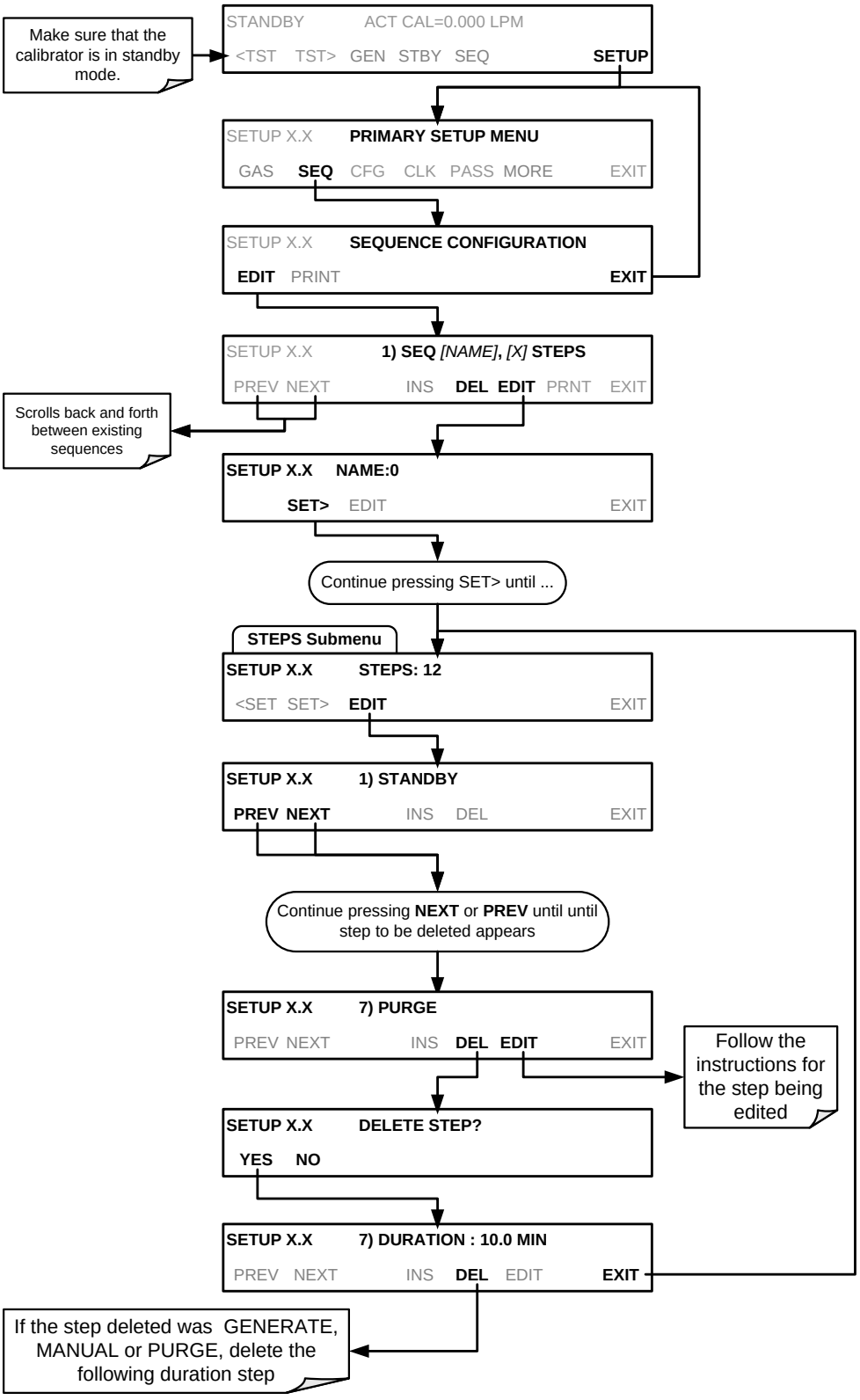

5.5.3. DELETING A SEQUENCE

To delete a sequence from the T700H calibrator's memory, press:

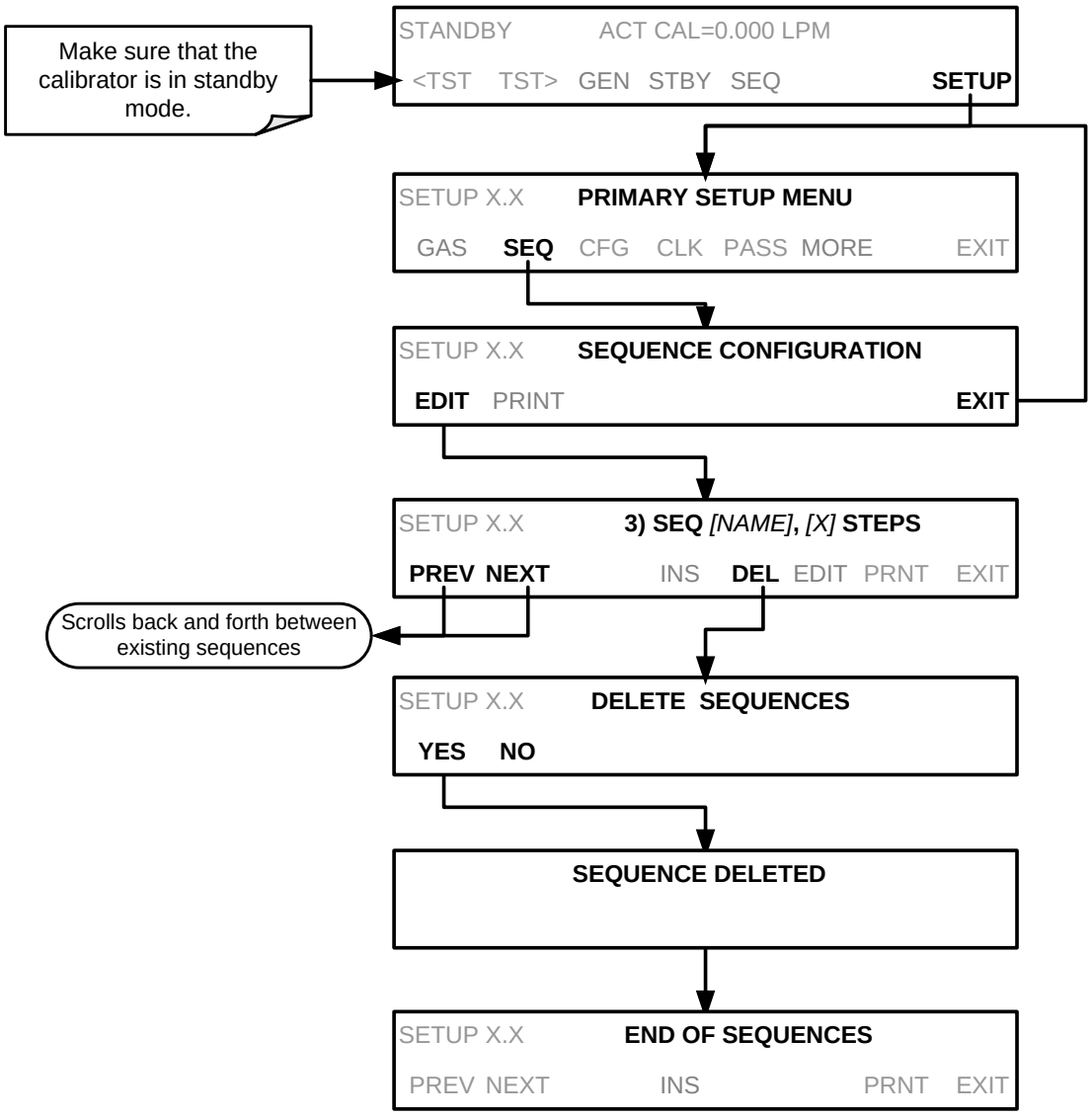

5.6. SETUP → CFG

Pressing the CFG button displays the instrument's configuration information. This display lists the calibrator model, serial number, firmware revision, software library revision, CPU type and other information.

Use this information to identify the software and hardware when contacting Technical Support.

Special instrument or software features or installed options may also be listed here.

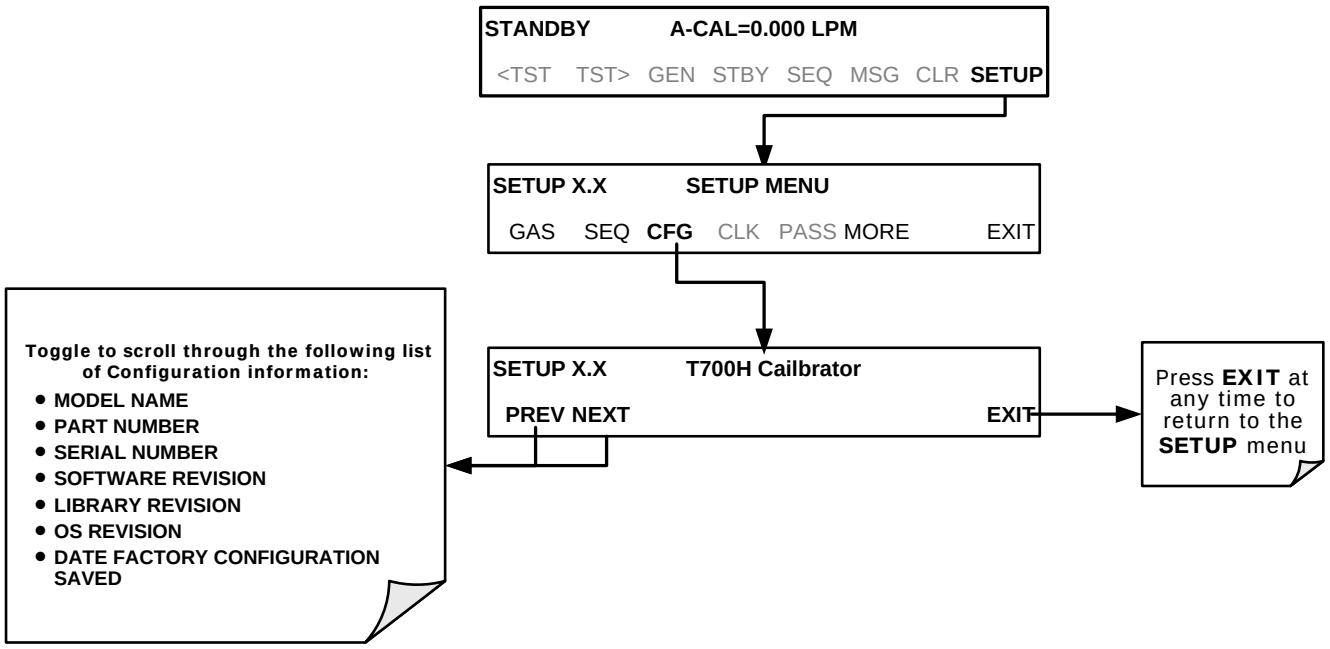

5.7. SETUP → CLK

5.7.1. SETTING THE INTERNAL CLOCK'S TIME AND DAY

The T700H has a time of day clock that supports the **DURATION** step of the calibration sequence feature, time of day TEST function, and time stamps on most COMM port messages. To set the clock's time and day, press:

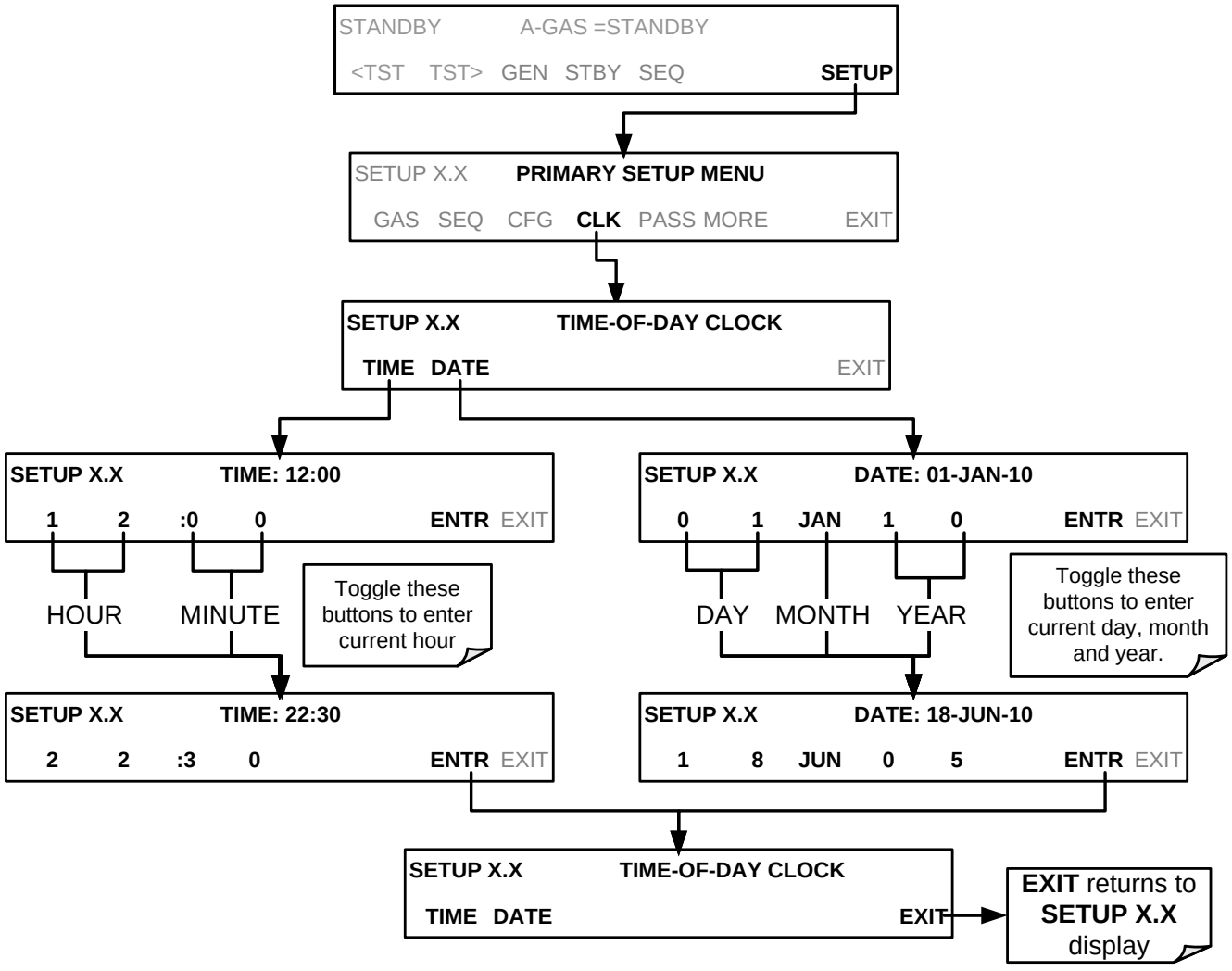

5.7.2. ADJUSTING THE INTERNAL CLOCK'S SPEED

In order to compensate for CPU clocks which run faster or slower, you can adjust a variable called **CLOCK_ADJ** to speed up or slow down the clock by a fixed amount every day. To change this variable, press:

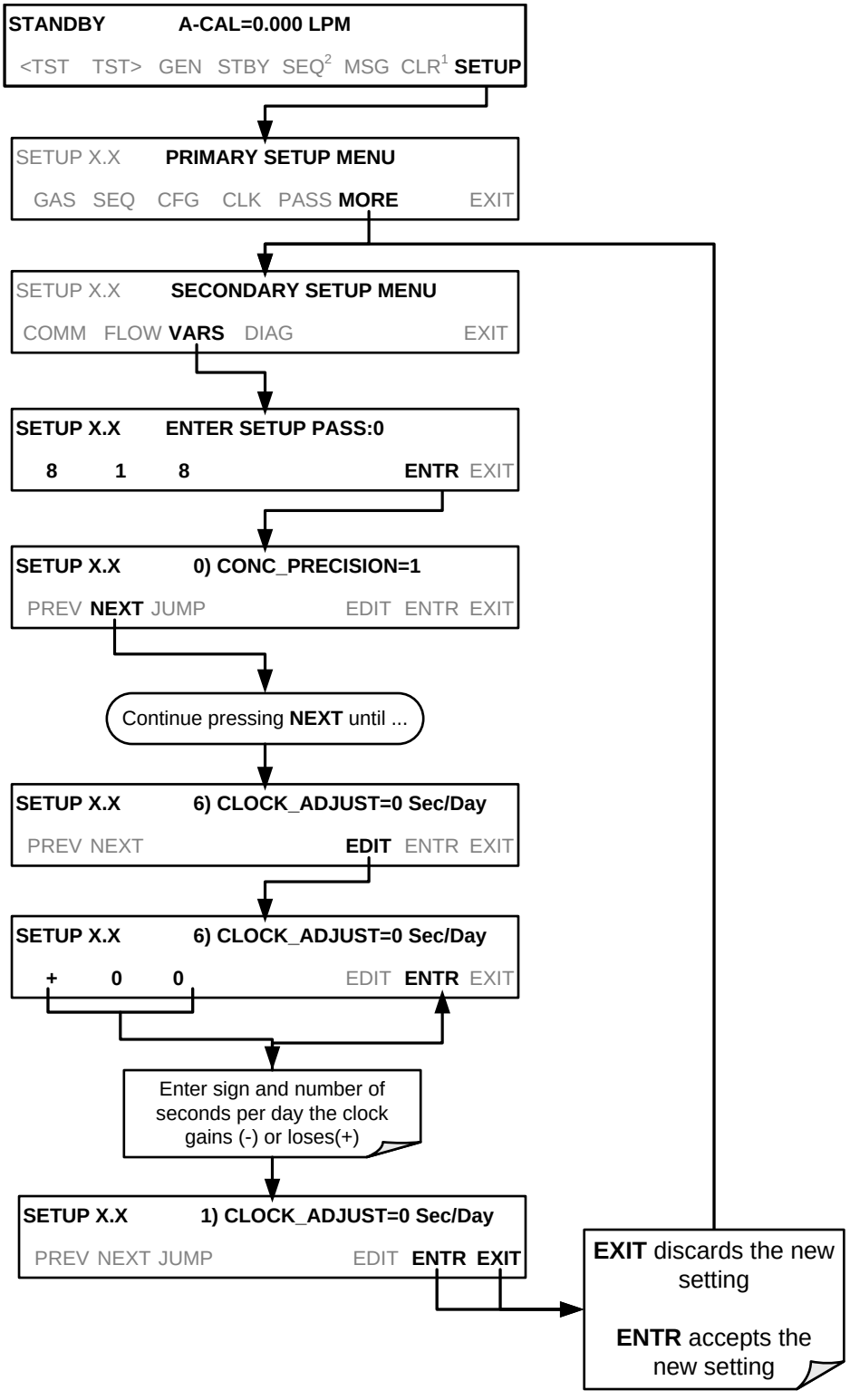

5.8. SETUP → PASS

The T700H provides password protection of the calibration and setup functions to prevent unauthorized adjustments. While PASSWORD is enabled (SETUP>PASS>ON), the system prompts the user for a password to enter the SETUP menu. This allows normal operation of the instrument, but requires the password (101) to access to the menus under SETUP. When PASSWORD is disabled (SETUP>PASS >OFF), any operator can enter the Primary Setup (SETUP) and Secondary Setup (SETUP>MORE) menus. Whether PASSWORD is enabled or disabled, a password (default 818) is required to enter the VARS or DIAG menus in the SETUP>MORE menu.

Table 5-10: Password Levels

PASSWORD	LEVEL	MENU ACCESS ALLOWED
null (000)	Operation	All functions of the MAIN menu: **TEST, GEN,** initiate **SEQ , MSG, CLR**
101	Maintenance/ Configuration	Access to Primary and Secondary Setup Menus when PASSWORD enabled.
818	Maintenance/ Configuration	Access to VARS and DIAG menus under the secondary SETUP menu whether PASSWORD is enabled or disabled.

To enable or disable passwords, press:

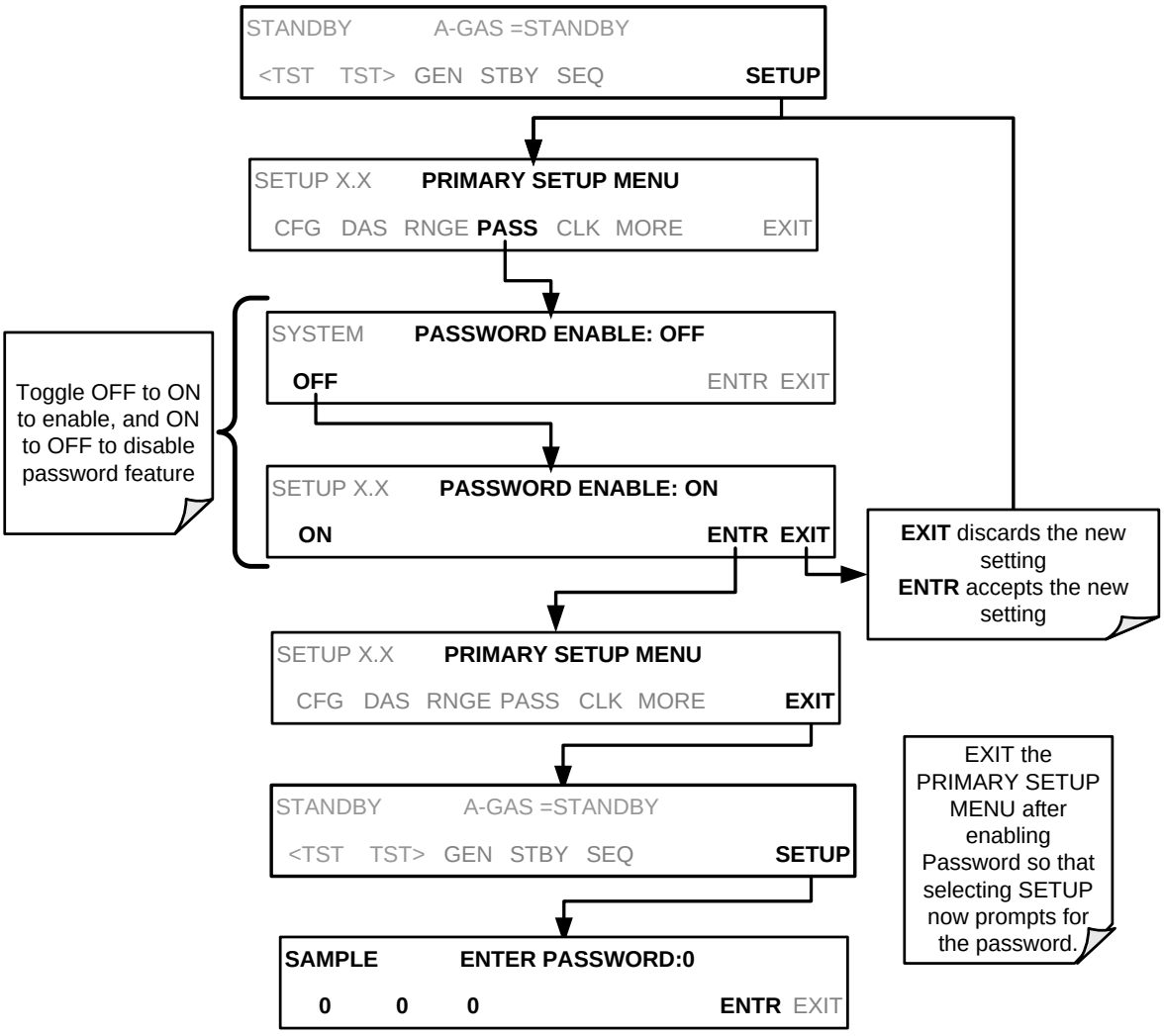

Example: If password protection is enabled, the following touch screen button sequence would be required to enter the VARS or DIAG submenus:

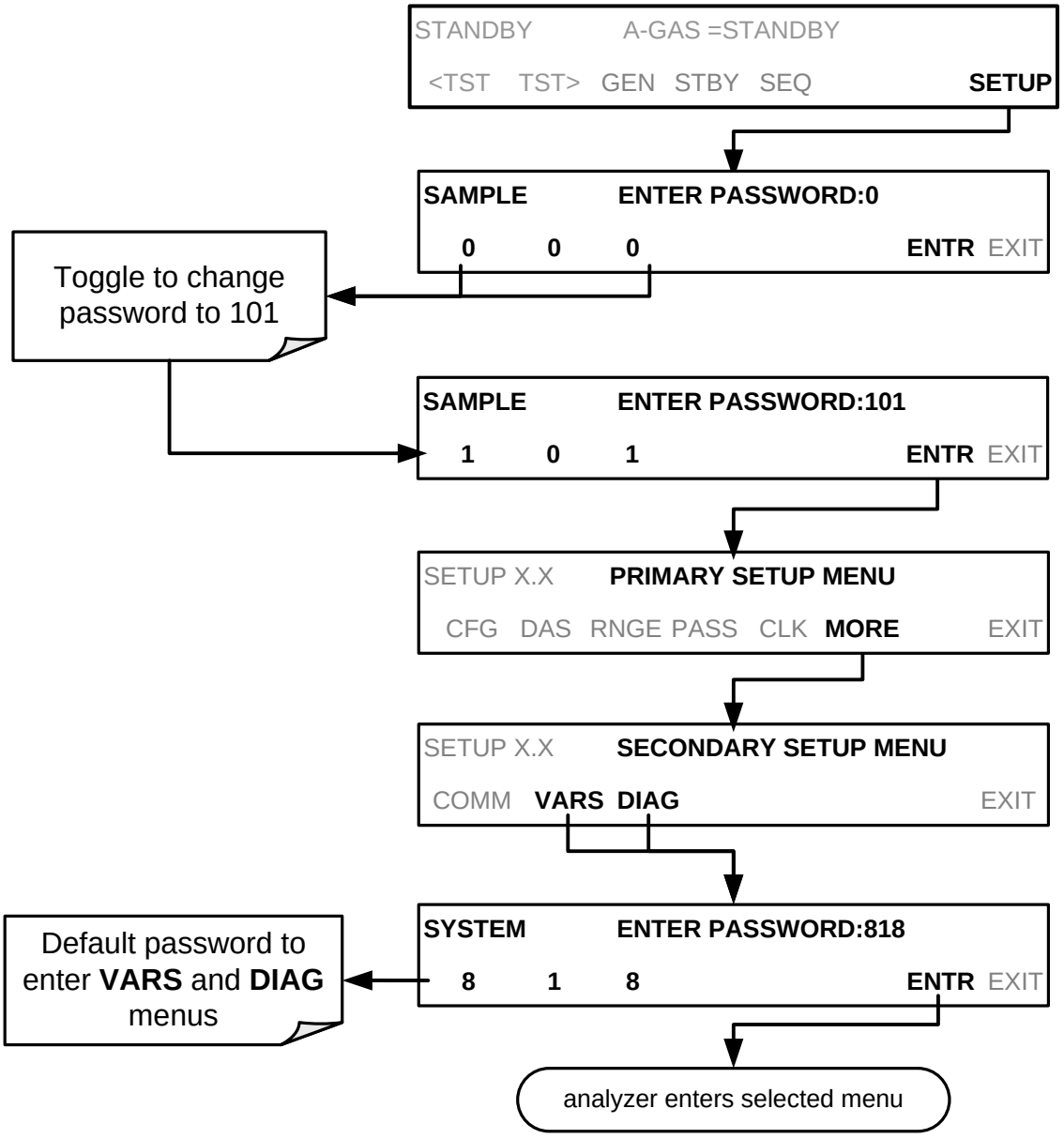

NOTE

Whether PASSWORD is enabled or disabled, the instrument prompts for a password when entering the VARS and DIAG menus. The menu interface displays the default password (818) upon entering either menu. Press ENTR to access the selected menu.

5.9. SETUP → DIAG → TEST CHAN OUTPUT: USING THE TEST CHANNEL ANALOG OUTPUT

The T700H calibrator comes equipped with one analog output. It can be set by the user to carry the current signal level of any one of the parameters listed in Table 5-12 and will output an analog VDC signal that rises and falls in relationship with the value of the parameter.

Pin-outs for the analog output connector at the rear panel of the instrument are:

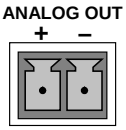

Figure 5-7: T700H TEST CHANNEL Connector

5.9.1. CONFIGURING THE TEST CHANNEL ANALOG OUTPUT

5.9.1.1. The Analog I/O Configuration Submenu

Table 5-11 lists the analog I/O functions that are available in the T700H calibrator.

Table 5-11: DIAG – Analog I/O Functions

SUB MENU	FUNCTION
AOUTS CALIBRATED:	Shows the status of the analog output calibration (YES/NO) and initiates a calibration of all analog output channels.
MFC_DRIVE_1	**These channels are used by the T700H calibrator internally as drive voltages for instruments with analog MFCs.** **DO NOT alter the settings for these channels.**
MFC_DRIVE_2	
MFC_DRIVE_3	
TEST OUTPUT	Configures the analog output: **RANGE**[1]: Selects the signal type (voltage or current loop) and full-scale value of the output. **OVERRANGE:** Turns the ± 5% over-range feature ON/OFF for this output channel. **REC_OFS**[1]: Sets a voltage offset (not available when **RANGE** is set to **CURR**ent loop. **AUTO_CAL**[1]: Sets the channel for automatic or manual calibration **CALIBRATED**[1]**:** Performs the same calibration as **AOUT CALIBRATED**, but on this one channel only.
AIN CALIBRATED	Shows the calibration status (YES/NO) and initiates a calibration of the analog to digital converter circuit on the motherboard.
[1]Changes to **RANGE** or **REC_OFS** require recalibration of this output.	

To configure the calibrator's **TEST CHANNEL**, set the electronic signal type of each channel and calibrate the outputs. This consists of the following:

- Choosing a **TEST CHANNEL** function to be output on the channel.
- Selecting a signal level that matches the input requirements of the recording device attached to the channel.
- Determining if the over-range feature is needed and turn it on or off accordingly.
- Adding a bipolar recorder offset to the signal if required (Section 5.9.1.5).
- Calibrating the output channel. This can be done automatically or manually for each channel (see Section 5.9.2).

To access the analog I/O configuration sub menu, press:

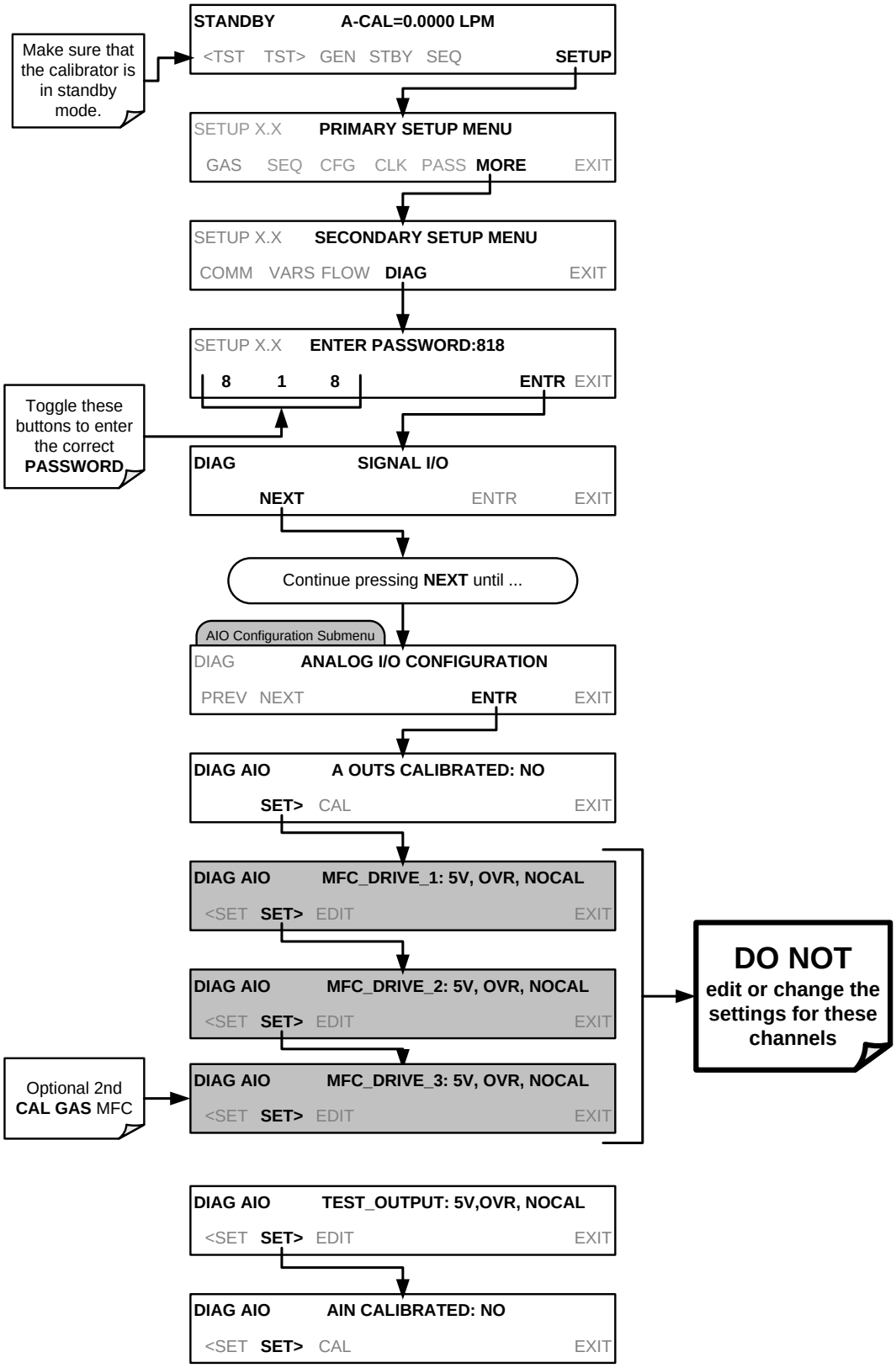

5.9.1.2. Selecting a Test Channel Function to Output

The Test Functions available for reporting are listed on Table 5-12:

Table 5-12: Test Channels Functions available on the T700H's Analog Output

TEST CHANNEL	DESCRIPTION	ZERO	FULL SCALE
NONE	**TEST CHANNEL IS TURNED OFF**		
REGULATOR PRESSURE	The gas pressure of the pressure regulator on the O_3 generator supply line	PSIG	PSIG
CHASSIS TEMP	The temperature inside the T700H's chassis (same as **BOX TEMP**)	0 C°	70 C°

Once a function is selected, the instrument not only begins to output a signal on the analog output, but also adds **TEST** to the list of Test Functions viewable via the Front Panel Display.

To activate the **TEST** Channel and select a function press:

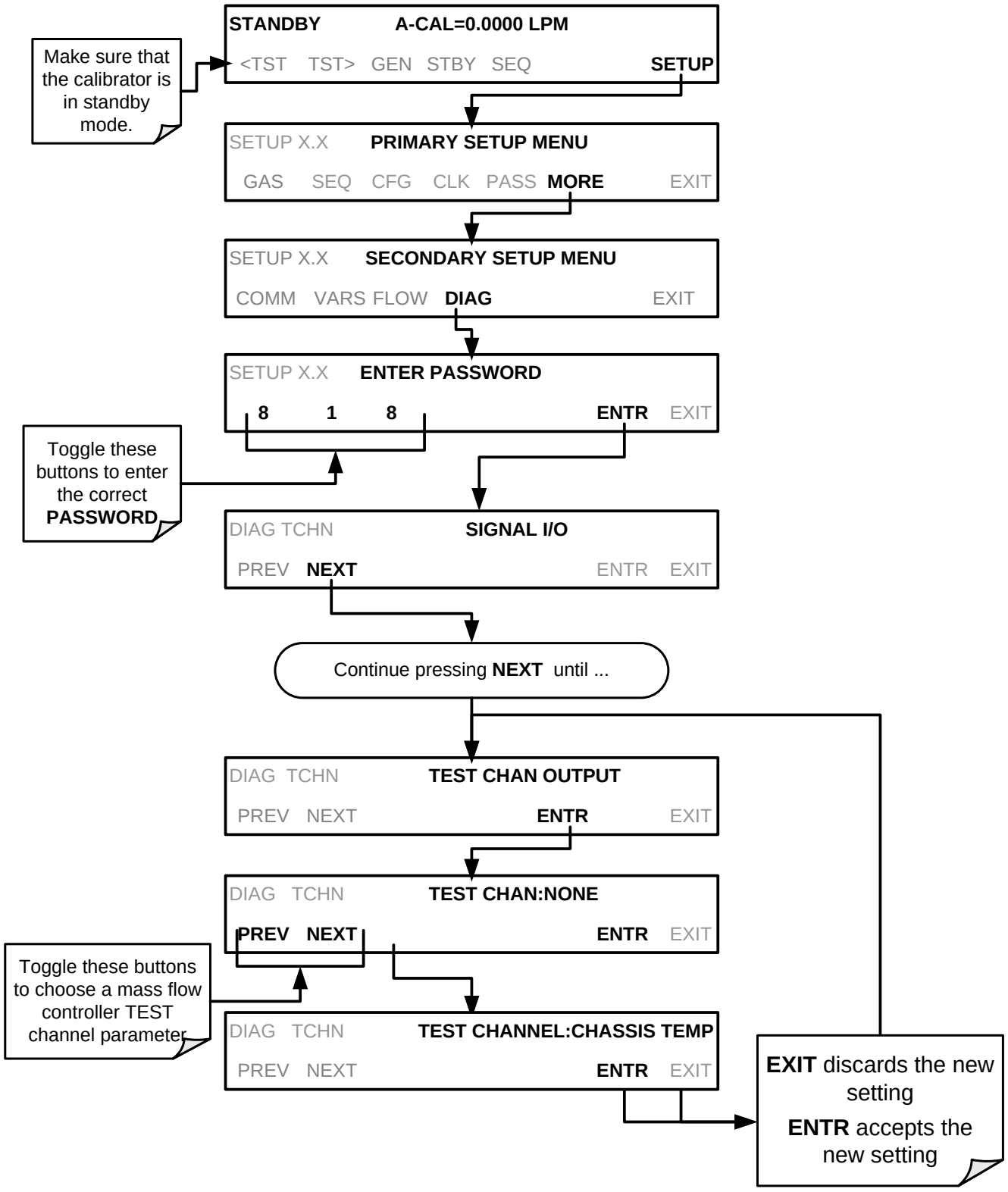

5.9.1.3. Configuring the TEST CHANNEL VOLTAGE RANGE

In its standard configuration, the analog outputs is set to output a 0 – 5 VDC signals. Several other output ranges are available (see Table 5-13). Each range is usable from -5% to + 5% of the rated span.

Table 5-13: Analog Output Voltage Range Min/Max

RANGE SPAN	MINIMUM OUTPUT	MAXIMUM OUTPUT
0-100 mVDC	-5 mVDC	105 mVDC
0-1 VDC	-0.05 VDC	1.05 VDC
0-5 VDC	-0.25 VDC	5.25 VDC
0-10 VDC	-0.5 VDC	10.5 VDC
The default offset for all ranges is 0 VDC.		

To change the output range, press:

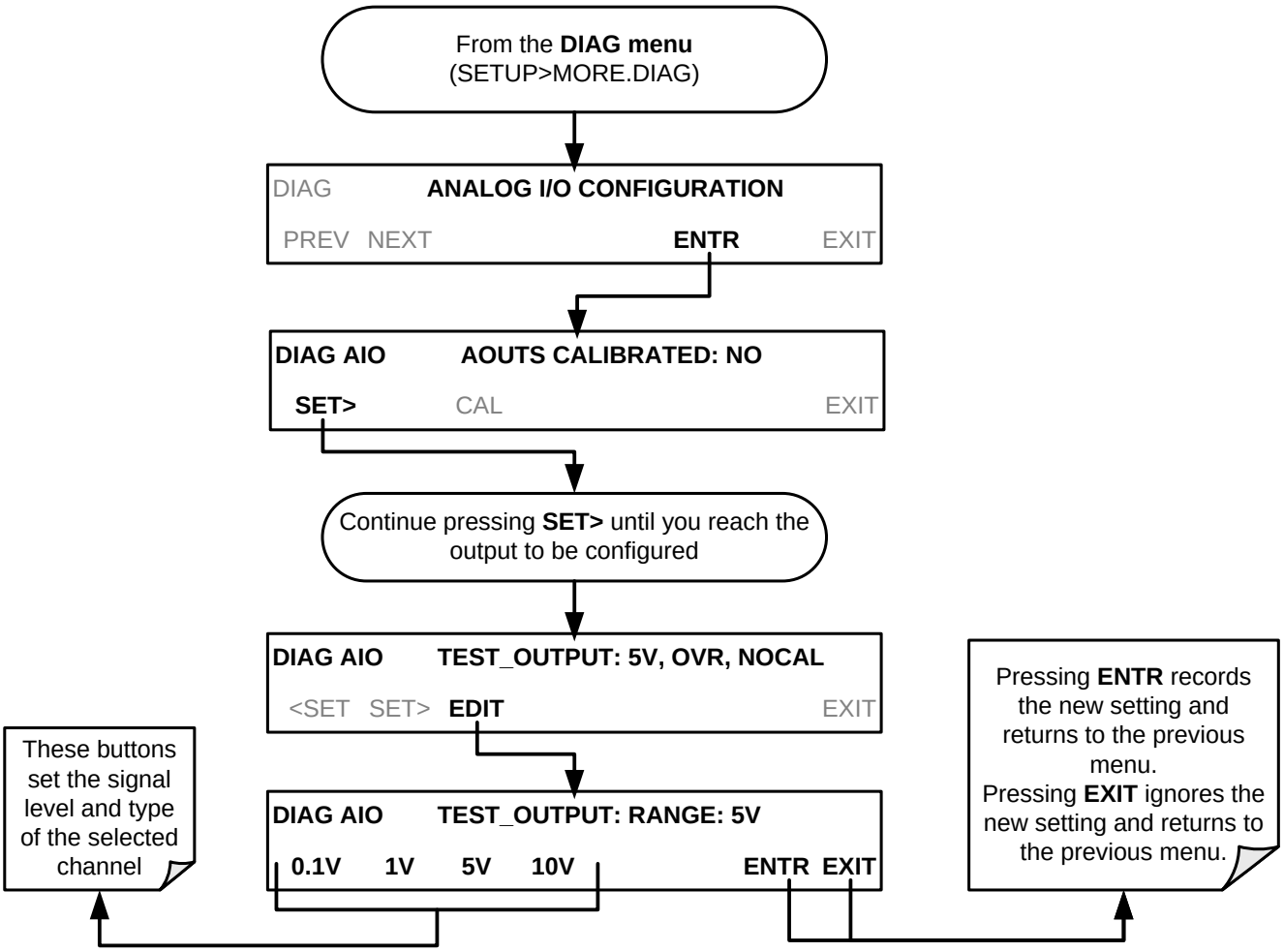

5.9.1.4. Turning the TEST CHANNEL Over-Range Feature ON/OFF

In its default configuration, a ± 5% over-range is available on each of the T700H's **TEST CHANNEL** output. This over-range can be disabled if your recording device is sensitive to excess voltage or current.

To turn the over-range feature on or off, press:

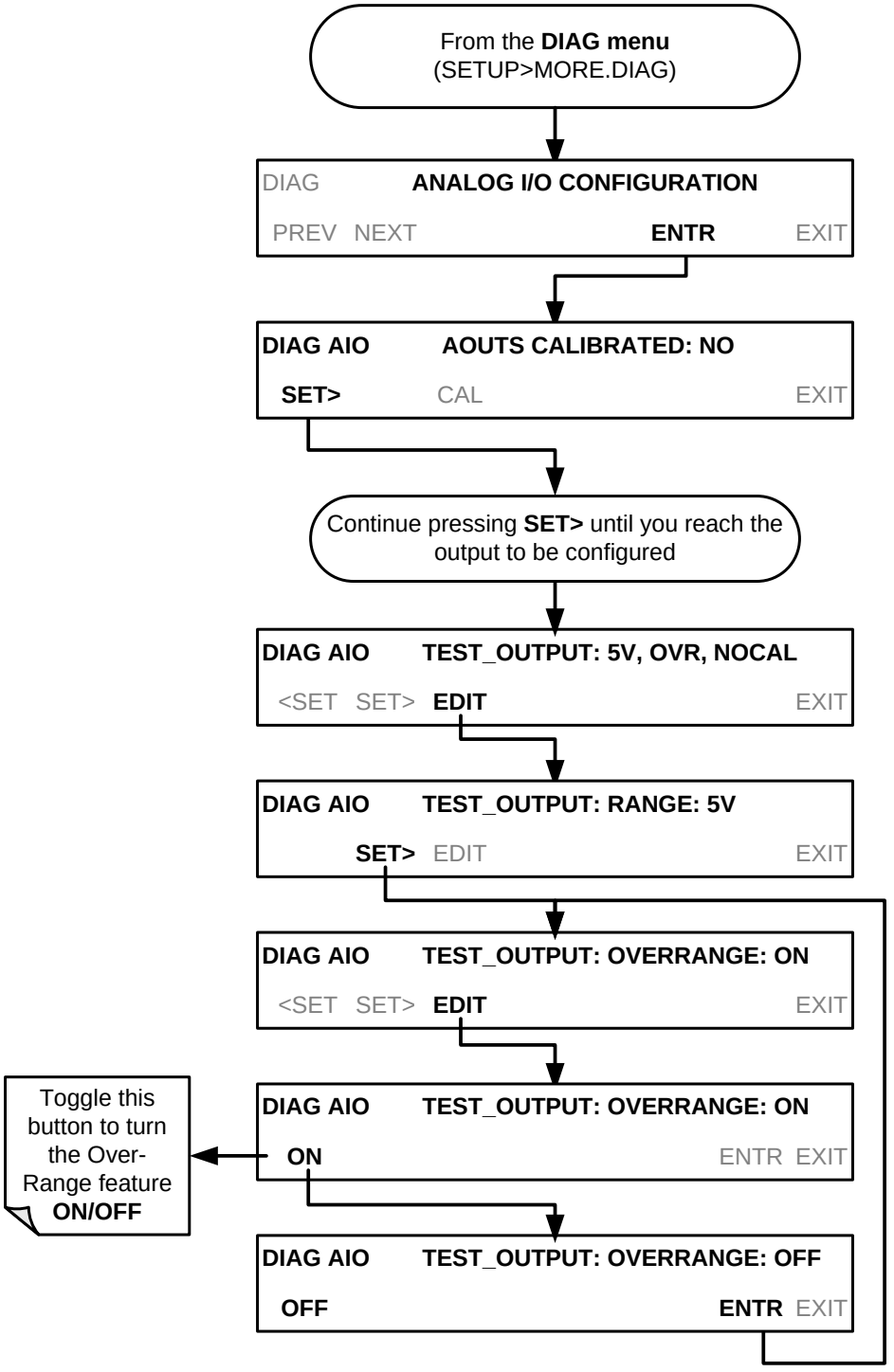

5.9.1.5. Adding a Recorder Offset to the TEST CHANNEL

Some analog signal recorders require that the zero signal is significantly different from the baseline of the recorder in order to record slightly negative readings from noise around the zero point. This can be achieved in the T700H by defining a zero offset, a small voltage (e.g., 10% of span).

To add a zero offset to a specific analog output channel, press:

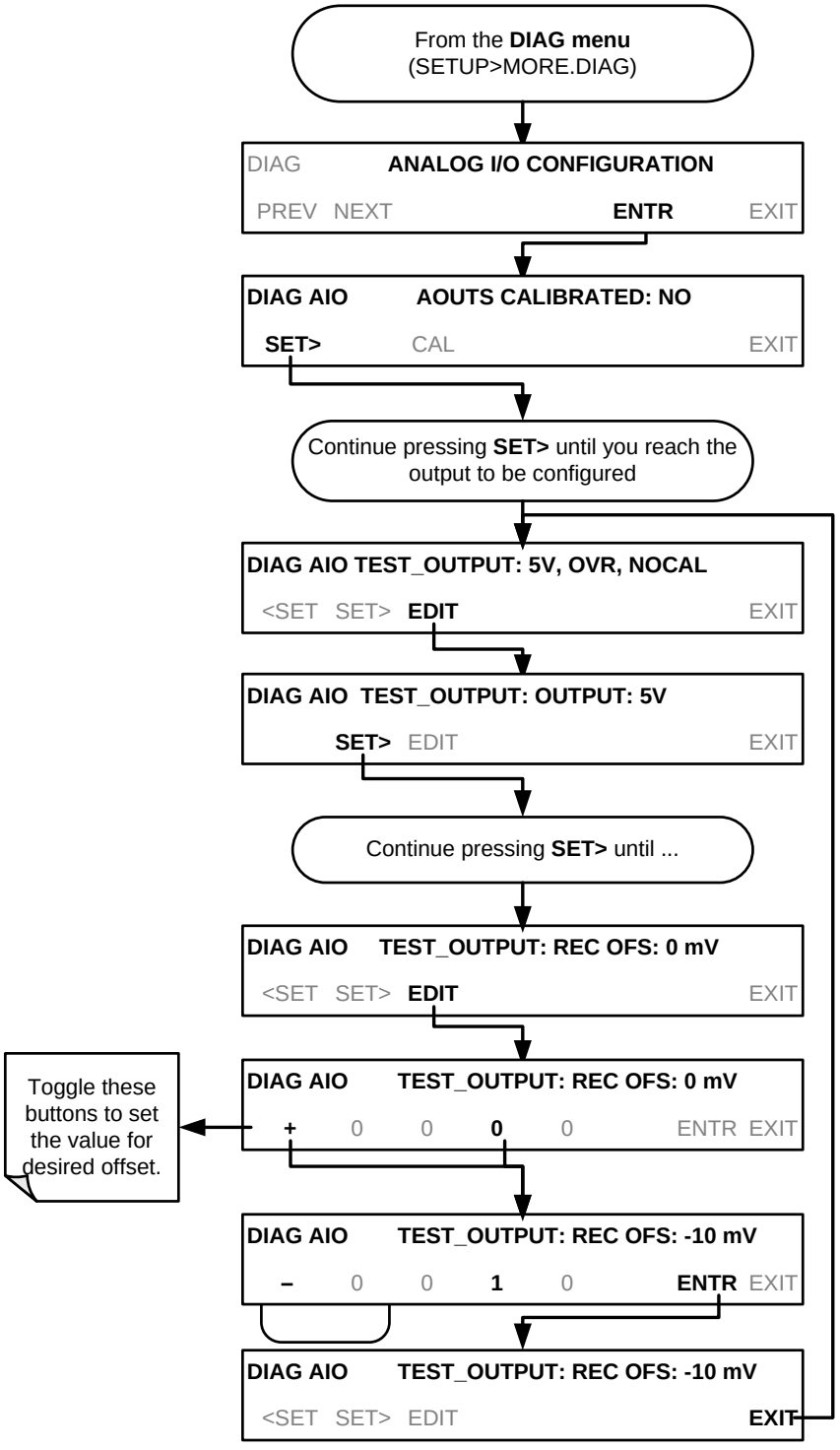

5.9.2. TEST CHANNEL CALIBRATION

TEST CHANNEL calibration needs to be carried out on first startup of the calibrator (performed in the factory as part of the configuration process) or whenever recalibration is required. The analog outputs can be calibrated automatically or adjusted manually.

In its default mode, the instrument is configured for automatic calibration of all channels, which is useful for clearing any analog calibration warnings associated with channels that will not be used or connected to any input or recording device, e.g., data logger.

Manual calibration should be used for the 0.1V range or in cases where the outputs must be closely matched to the characteristics of the recording device. Manual calibration requires the AUTOCAL feature to be disabled.

5.9.2.1. Enabling or Disabling the TEST CHANNEL AUTOCAL Feature

To enable or disable the AUTOCAL feature for the **TEST CHANNEL**, press:

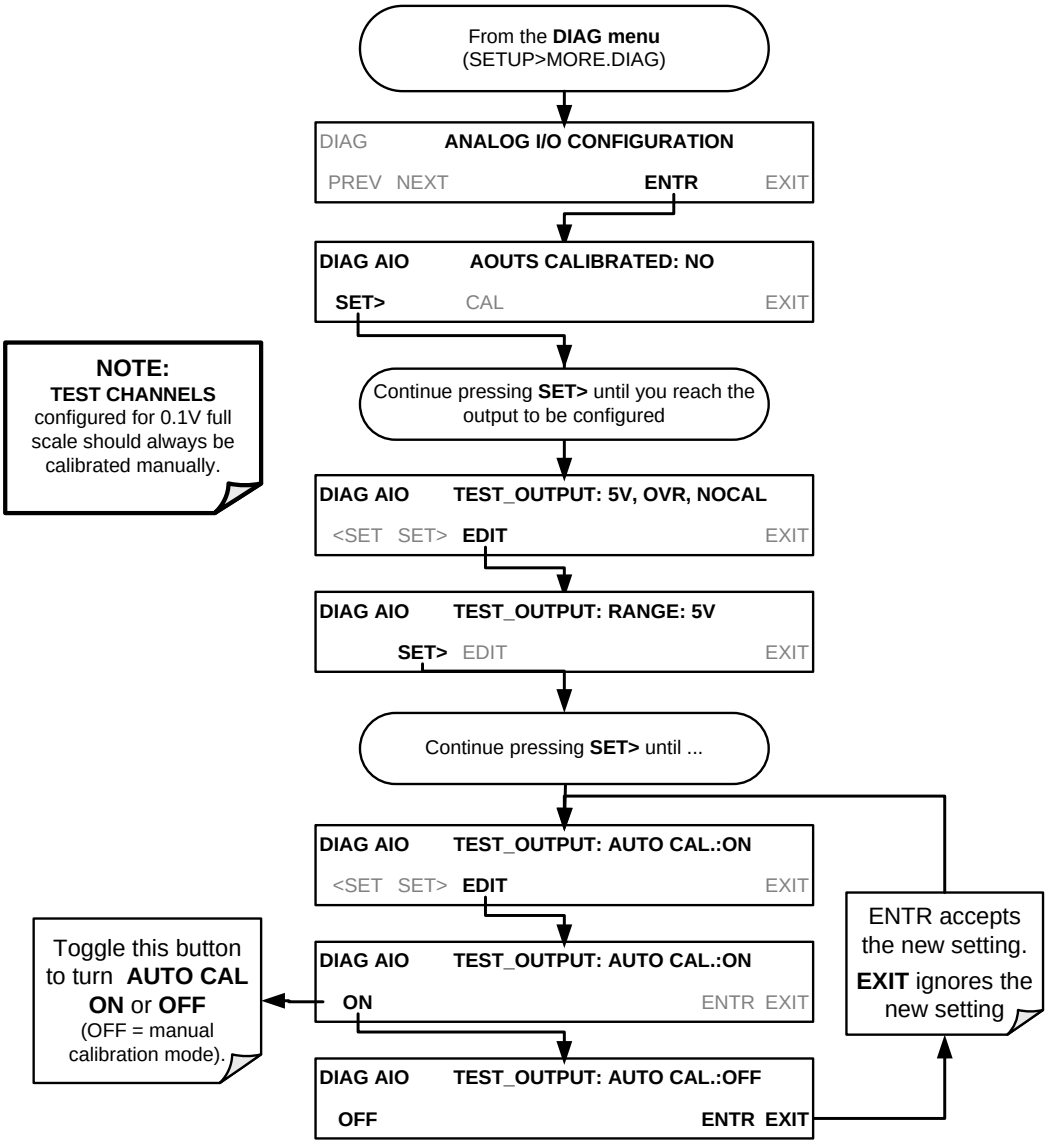

5.9.2.2. Automatic TEST CHANNEL Calibration

NOTE

Before performing this procedure, ensure that the AUTO CAL feature is turned **OFF** for MFC_DRIVE_1, MFC_DRIVE_2 and MFC_DRIVE_3 if installed)

Ensure that the AUTO CAL feature is turned **ON** for the TEST CHANNEL (See Section 5.9.2.1)

To calibrate the outputs as a group with the **AOUTS CALIBRATION** command, press:

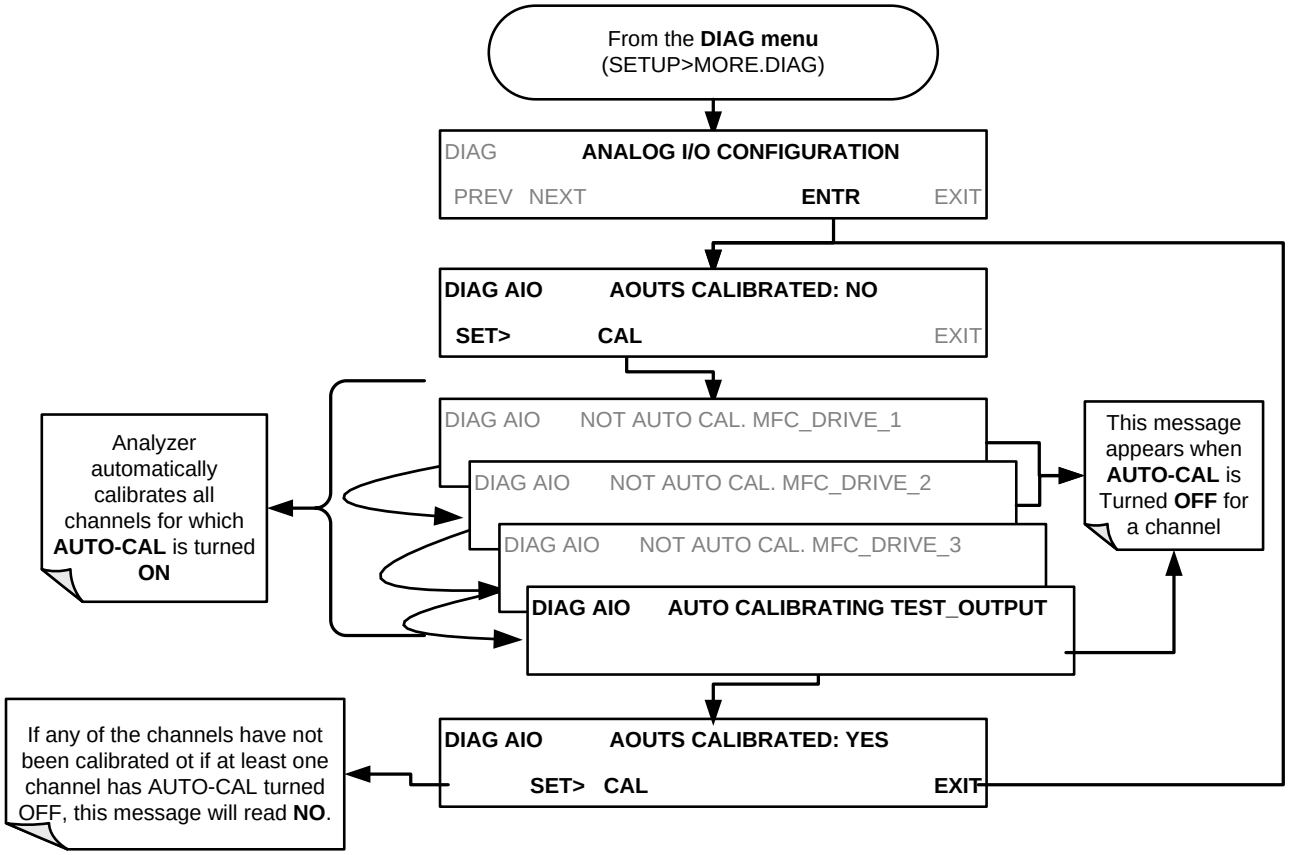

NOTE

Manual calibration should be used for the 0.1V range or in cases where the outputs must be closely matched to the characteristics of the recording device. Manual calibration requires that the AUTOCAL feature be disabled.

To initiate an automatic calibration from inside the **TEST CHANNEL** submenu, press:

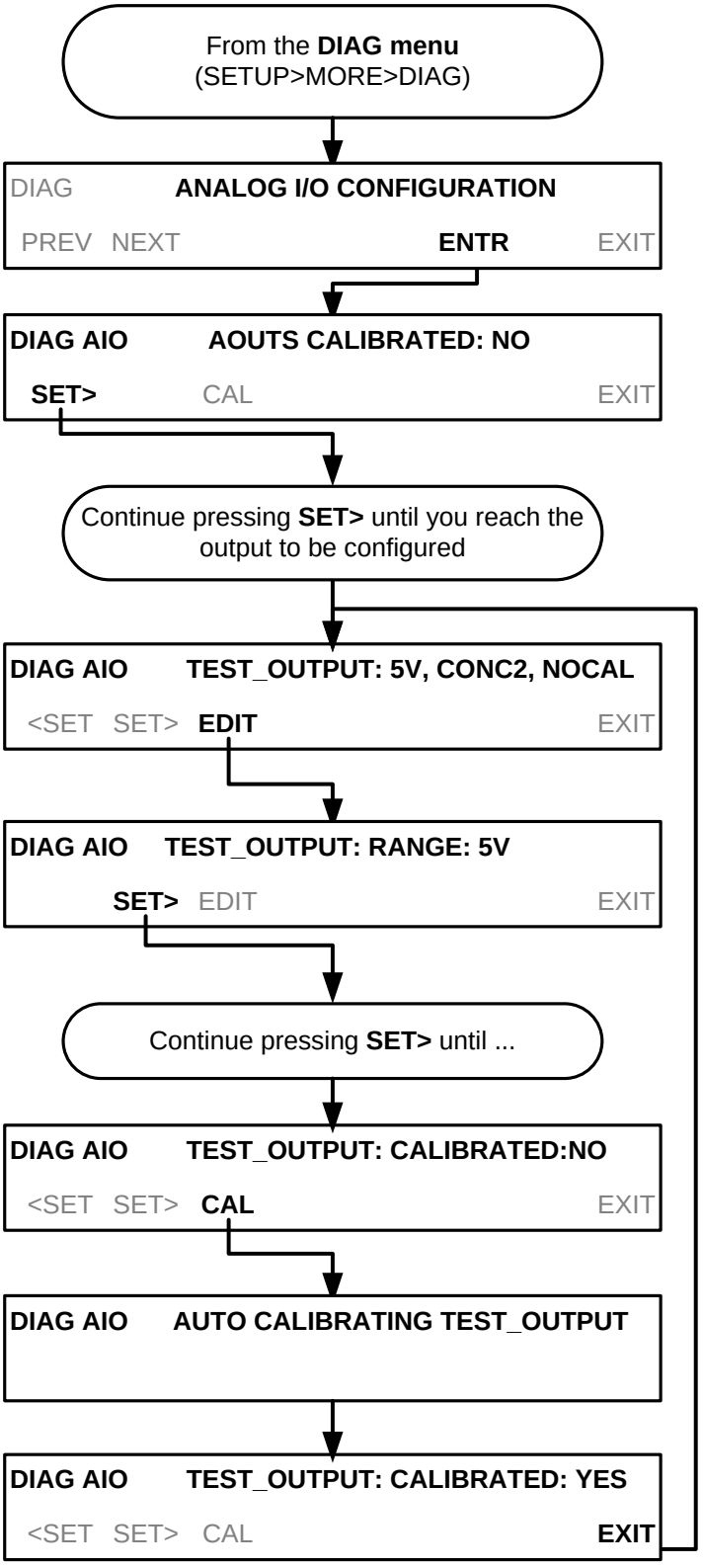

5.9.2.3. Manually Calibrating the TEST CHANNEL Configured for Voltage Ranges

For highest accuracy, the voltages of the analog outputs can be calibrated manually.

NOTE

The menu for manually adjusting the analog output signal level will only appear if the AUTO-CAL feature is turned off for the channel being adjusted (see Section 5.4.1).

Calibration is performed with a voltmeter connected across the output terminals and by changing the actual output signal level using the front panel buttons in 100, 10 or 1 count increments.

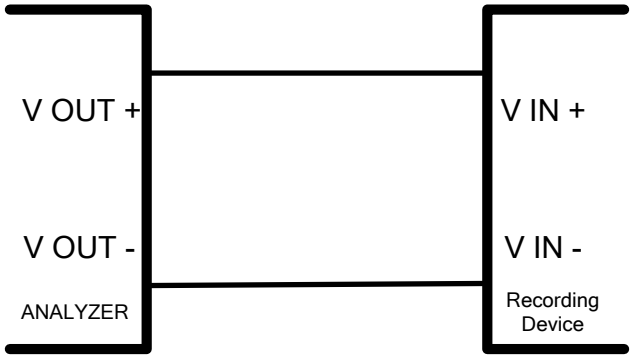

Figure 5-8: Setup for Calibrating the TEST CHANNEL

Table 5-14: Voltage Tolerances for the TEST CHANNEL Calibration

FULL SCALE	ZERO TOLERANCE	SPAN VOLTAGE	SPAN TOLERANCE	MINIMUM ADJUSTMENT (1 count)
0.1 VDC	±0.0005V	90 mV	±0.001V	0.02 mV
1 VDC	±0.001V	900 mV	±0.001V	0.24 mV
5 VDC	±0.002V	4500 mV	±0.003V	1.22 mV
10 VDC	±0.004V	4500 mV	±0.006V	2.44 mV

To adjust the signal levels of an analog output channel manually, press:

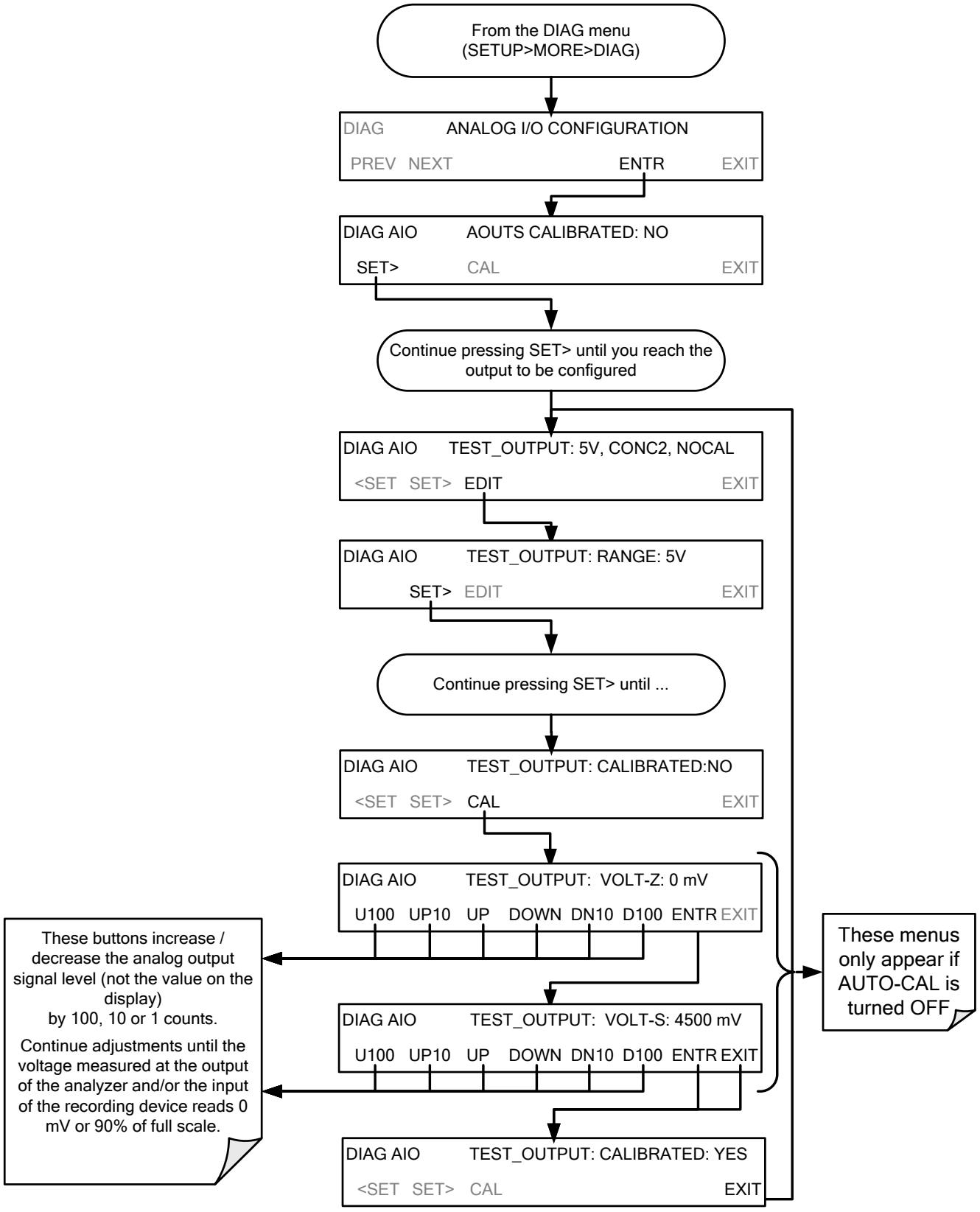

5.9.3. AIN CALIBRATION

This is the sub-menu calibrates the calibrator's A-to-D conversion circuitry. This calibration is only necessary after a major repair such as the replacement of a CPU, a motherboard or a power supply.

To perform an **AIN CALIBRATION**, press:

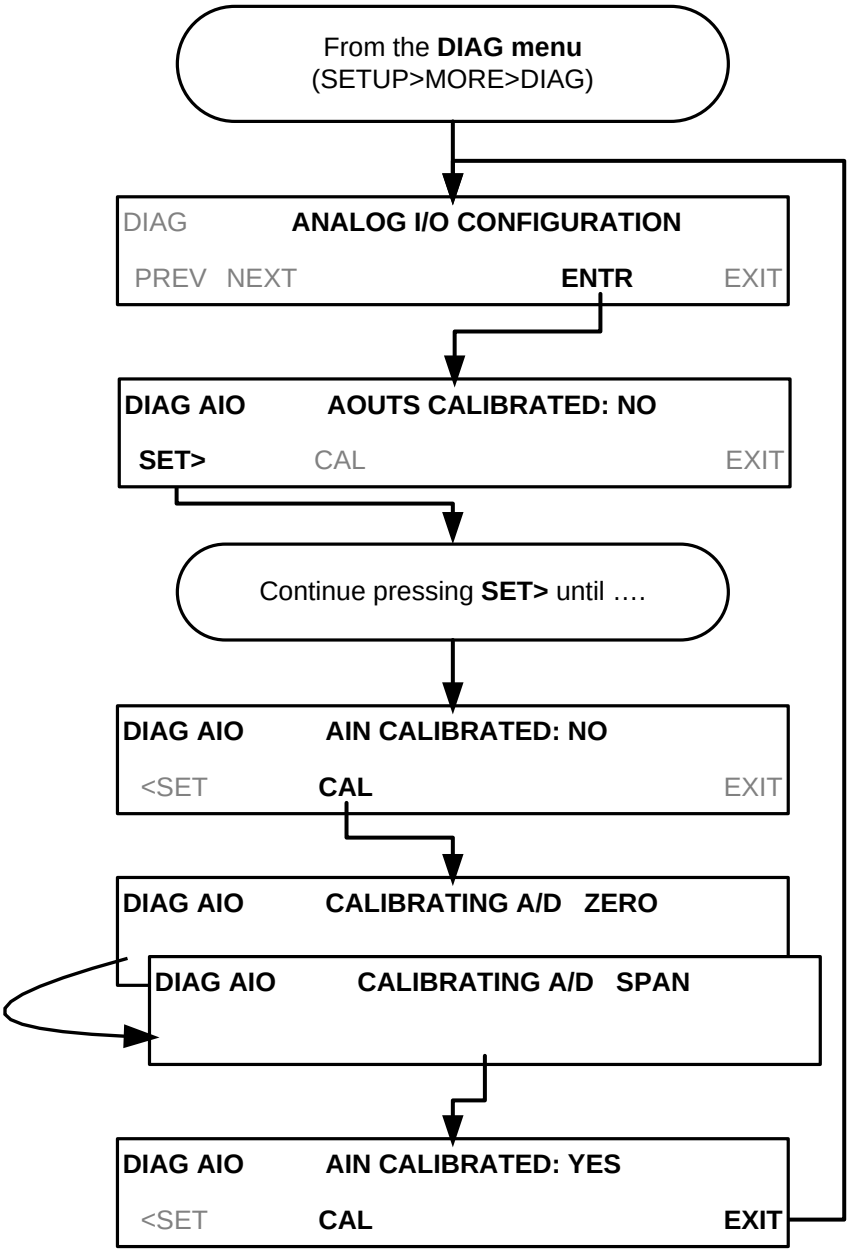

5.10. SETUP → MORE → VARS: INTERNAL VARIABLES (VARS)

The T700H has several user-adjustable software variables, which define certain operational parameters. Usually, these variables are automatically set by the instrument's firmware, but can be manually redefined using the VARS menu.

The following table lists all variables that are available within the 818 password protected level. See Appendix A for a detailed listing of all of the T700H variables that are accessible through the remote interface.

Table 5-15: Variable Names (VARS)

NO.	VARIABLE	DESCRIPTION	ALLOWED VALUES	DEFAULT VALUES
0	*PHOTO_LAMP*[1]	*Not applicable to T700H*		
1	*O3_GEN LAMP*[1]	*Not applicable to T700H*	*0ºC and 100ºC*	*48ºC Warning limits 43ºC - 53ºC*
2	*O3_CONC_RANGE*[1]	*Not applicable to T700H*	*0.1–20000 ppb*	*500 ppb*
3	*O3_PHOTO_BENCH_ONLY*[1]	*Not applicable to T700H*	*ON/OFF*	*OFF*
4	**UNASSIGNED**			
5	**STD_TEMP**	Sets the standard temperature used when calculating mg/m^3 and µg/m3 gas concentration units.	**0ºC and 100ºC**	**0ºC**
6	**STD_PRESS**	Sets the standard pressure used when calculating mg/m^3 and µg/m3 gas concentration units.	**15.00 – 50 .00 in-Hg-A**	**29.92 in-Hg-A**
7	**CLOCK_ADJ**	Adjusts the speed of the analyzer's clock. Choose the + sign if the clock is too slow, choose the - sign if the clock is too fast (See Section 5.7).	**-60 to +60 s/day Default=0**	**0**

[1] May appear in the menu but are not applicable to T700H

NOTE

There is a 2-second latency period between when a VARS value is changed and the new value is stored into the analyzer's memory.

DO NOT turn the analyzer off during this period or the new setting will be lost.

To access and navigate the VARS menu, press SETUP>MORE>VARS:

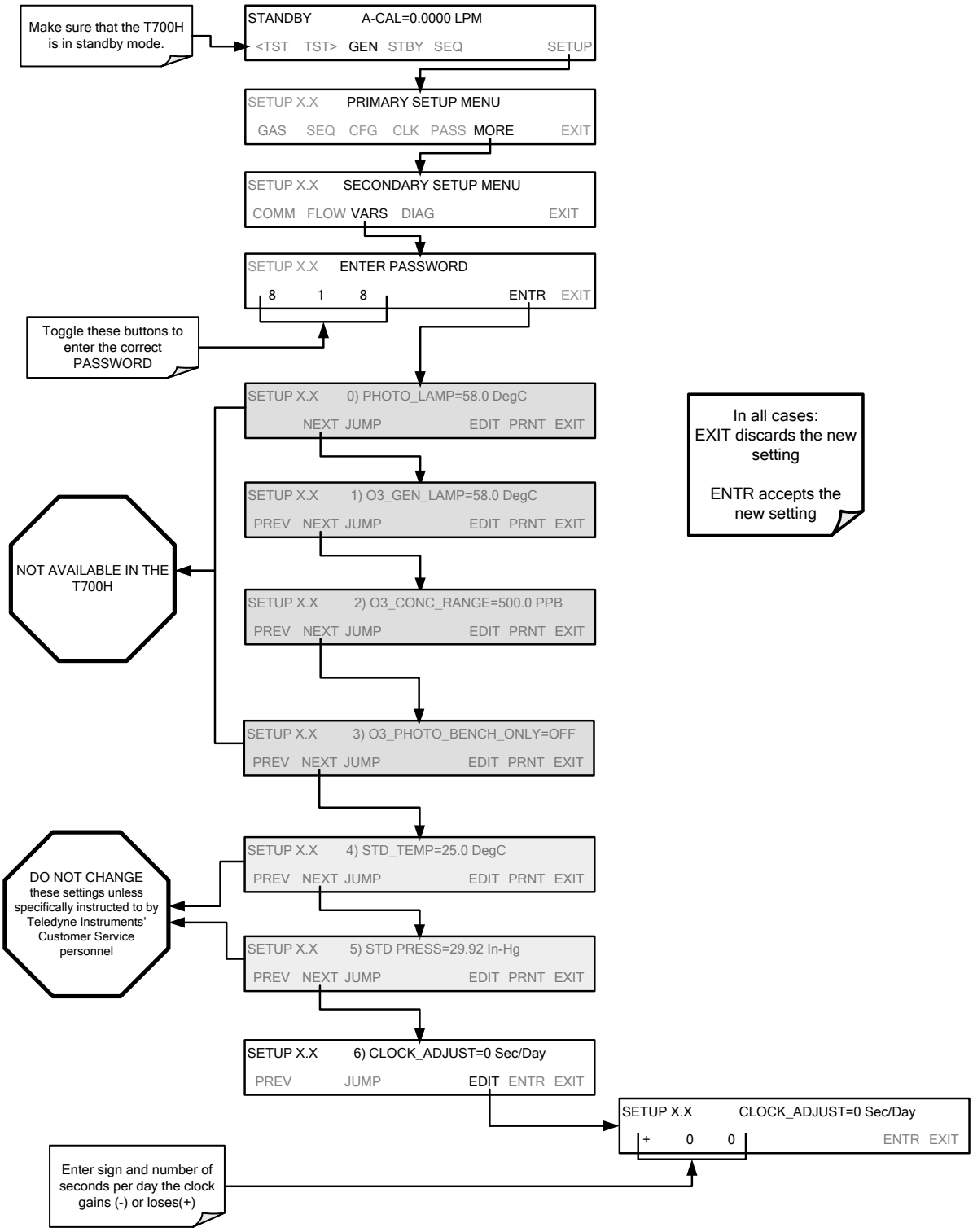

This page intentionally left blank.

6. REMOTE OPERATION

This section presents several methods for remote operation.

6.1. USING THE ANALYZER'S COMMUNICATION PORTS

The T700H is equipped with two serial communication ports (labeled **RS232** and **COM2**), a USB com port (option) and an Ethernet port located on the rear panel. The two serial ports are accessible via two DB-9 connectors (refer to Figure 3-4): RS232 (COM1), a male DB-9 connector, and COM2, a female DB9 connector.

The RS232 and COM2 ports operate similarly and give the user the ability to communicate with, issue commands to, and receive data from the calibrator through an external computer system or terminal.

- The RS-232 port (COM1) can also be configured to operate in single or RS-232 multi-drop mode (option 62; See Section 4.4.2 and 6.2.1).
- The COM2 port can be configured for standard RS-232 operation, half-duplex RS-485 communication. (Contact the factory for RS-485 communication configuration).

The Ethernet connector allows the analyzer to be connected to a network running TCP/IP or to the public Internet if access is available. The network must have routers capable of operating at 10BaseT or 100BaseT. DHCP is enabled by default (Section 6.5). This configuration is useful for quickly getting an instrument up and running on a network. However, for permanent Ethernet connections, a static IP address should be used (Section 6.5.1.1). Edit the Instrument and Gateway IP addresses and Subnet Mask to the desired settings. Then, from the computer, enter the same information through an application such as HyperTerminal.

The USB port is for optional direct communication between the calibrator and a desktop or laptop computer. This configuration can be used when the **COM2** port is not in use except for multidrop communication. When using the USB com port, the baud rate must match between the computer and the calibrator; you may change either one to match the other. To view the instrument's baud rate, and change if desired, please refer to Section 6.1.3.

6.1.1. RS-232 DTE AND DCE COMMUNICATION

RS-232 was developed for allowing communications between data terminal equipment (DTE) and data communication equipment (DCE). Basic data terminals always fall into the DTE category whereas modems are always considered DCE devices.

Electronically, the difference between the DCE and DTE is the pin assignment of the Data Receive and Data Transmit functions.

- DTE devices receive data on pin 2 and transmit data on pin 3.
- DCE devices receive data on pin 3 and transmit data on pin 2.

A switch located below the serial ports on the rear panel allows the user to switch between DTE (for use with data terminals) or DCE (for use with modems). Since computers can be either DTE or DCE, check your computer to determine which mode to use.

6.1.2. SERIAL COMM PORT DEFAULT SETTINGS AND CONNECTOR PIN ASSIGNMENTS

Received from the factory, the calibrator is set up to emulate an RS-232 DCE device.

- **RS-232 (COM1)**: RS-232 (fixed), DB-9 male connector.
  - **Baud rate**: 19200 bits per second (baud).
  - **Data Bits**: 8 data bits with 1 stop bit.
  - **Parity**: None.
- **COM2**: RS-232 (configurable to RS 485), DB-9 female connector.
  - **Baud rate**: 115000 bits per second (baud).
  - **Data Bits**: 8 data bits with 1 stop bit.
  - **Parity**: None.

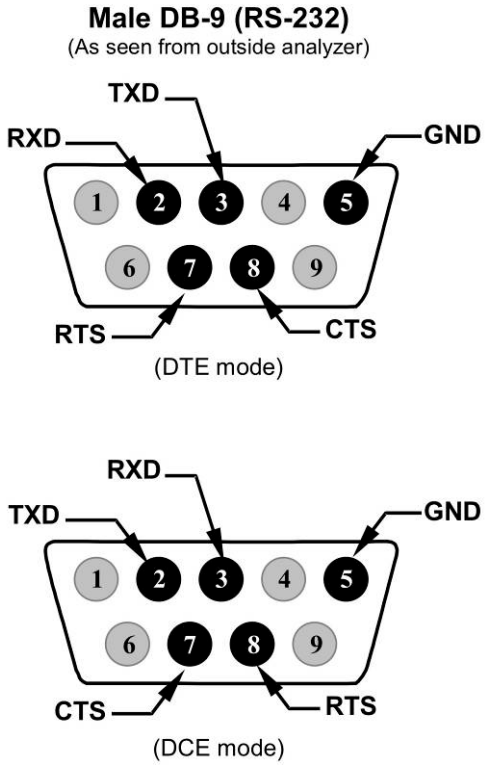

Figure 6-1: Default Pin Assignments for Back Panel COMM Port Connectors (RS-232 DCE & DTE)

The signals from these two connectors are routed from the motherboard via a wiring harness to two 10-pin connectors on the CPU card, J11 and J12 (Figure 6-2.

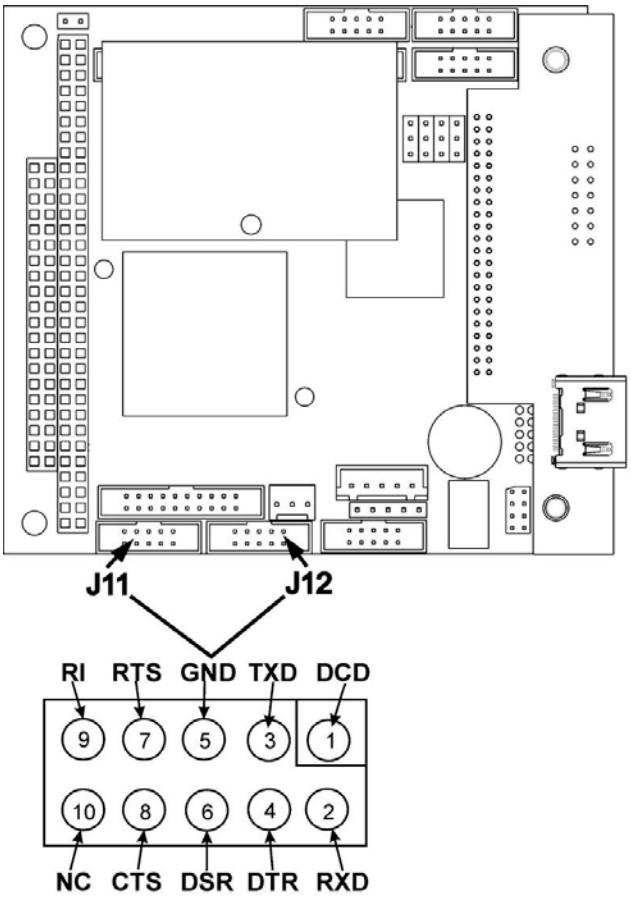

Figure 6-2: Default Pin Assignments for CPU COMM Port Connector (RS-232).

TAPI offers two mating cables, one of which should be applicable for your use.

- P/N WR000077, a DB-9 female to DB-9 female cable, 6 feet long. Allows connection of the serial ports of most personal computers. Also available as Option 60B (see Section 4.4.1).
- P/N WR000024, a DB-9 female to DB-25 male cable. Allows connection to the most common styles of modems (e.g. Hayes-compatible) and code activated switches. Also available as Option 60A (see Section 4.4.1).

Both cables are configured with straight-through wiring and should require no additional adapters.

NOTE

Cables that appear to be compatible because of matching connectors may incorporate internal wiring that makes the link inoperable. Check cables acquired from sources other than TAPI for pin assignments before using.

To assist in properly connecting the serial ports to either a computer or a modem, there are activity indicators just above the RS-232 port. Once a cable is connected between the calibrator and a computer or modem, both the red and green LEDs should be on.

If the LEDs are not lit, adjust small switch on the rear panel to switch between DTE and DCE modes, and/or ensure the cable properly connected.

6.1.3. COMM PORT BAUD RATE

To select the baud rate for serial communications (use COM2 for the USB port), press:

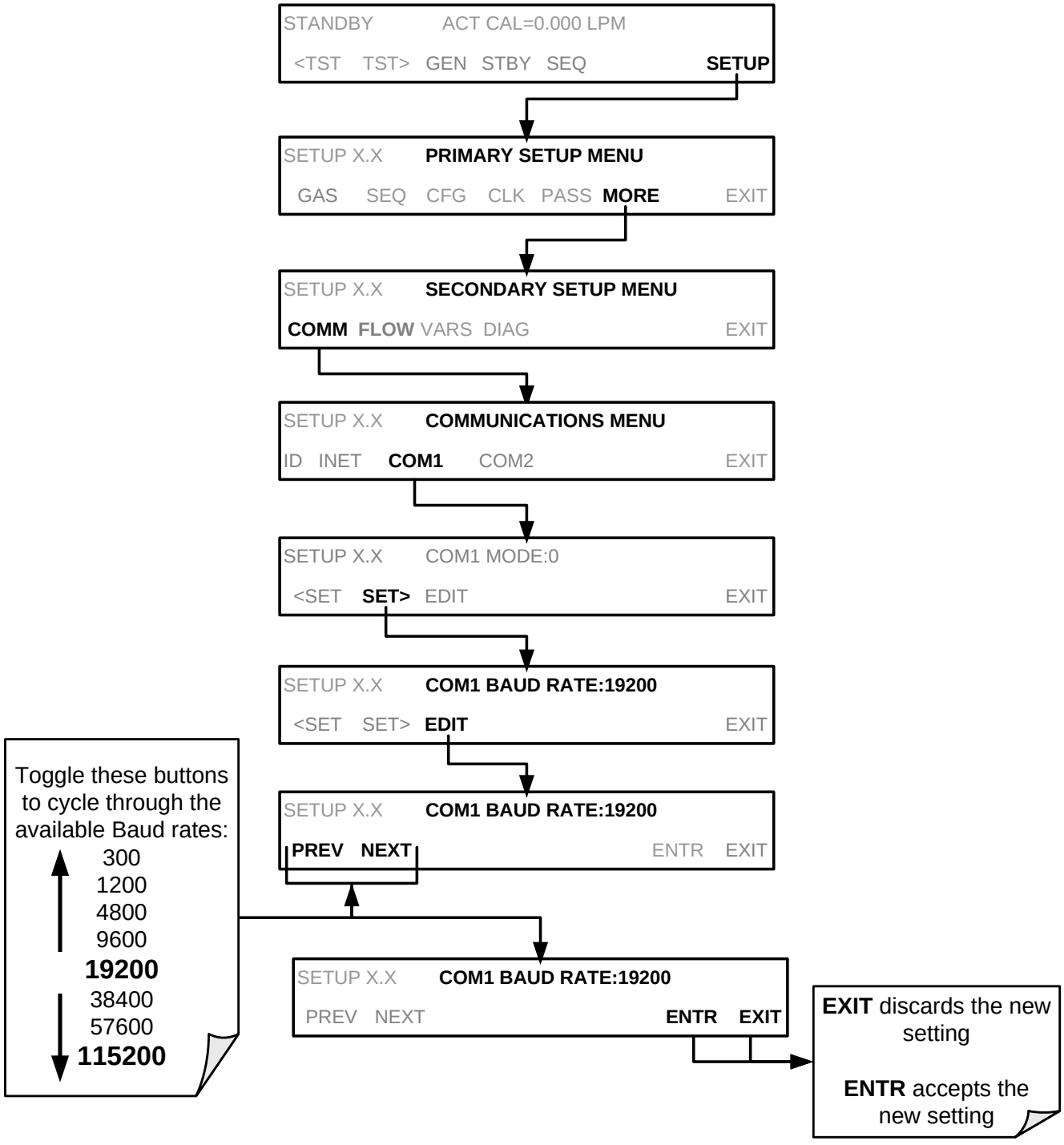

6.1.4. COMM PORT COMMUNICATION MODES

Each of the calibrator's serial ports can be configured to operate in a number of different modes, listed in Table 6-1. As modes are selected, the calibrator sums the Mode ID numbers and displays this combined number on the front panel display. For example, if quiet mode (01), computer mode (02) and Multi-Drop-enabled mode (32) are selected, the Calibrator would display a combined **MODE ID** of **35**.

Table 6-1: COMM Port Communication Modes

MODE[1]	ID	DESCRIPTION
QUIET	**1**	Quiet mode suppresses any feedback from the calibrator (such as warning messages) to the remote device and is typically used when the port is communicating with a computer program where such intermittent messages might cause communication problems. Such feedback is still available but a command must be issued to receive them.
COMPUTER	**2**	Computer mode inhibits echoing of typed characters and is used when the port is communicating with a computer operated control program.
SECURITY	**4**	When enabled, the serial port requires a password before it will respond. The only command that is active is the help screen (? CR).
E, 7, 1	**2048**	When turned on this mode switches the **COMM** port settings from No parity; 8 data bits; 1 stop bit to Even parity; 7 data bits; 1 stop bit
RS-485	**1024**	Configures the **COM2** Port for RS-485 communication. RS-485 mode has precedence over multi-drop mode if both are enabled.
MULTI-DROP PROTOCOL	**32**	Multi-drop protocol allows a multi-instrument configuration on a single communications channel. Multi-drop requires the use of instrument IDs.
ENABLE MODEM	**64**	Enables to send a modem initialization string at power-up. Asserts certain lines in the RS-232 port to enable the modem to communicate.
ERROR CHECKING[2]	**128**	Fixes certain types of parity errors at certain Hessen protocol installations.
XON/XOFF HANDSHAKE[2]	**256**	Disables XON/XOFF data flow control also known as software handshaking.
HARDWARE HANDSHAKE	**8**	Enables CTS/RTS style hardwired transmission handshaking. This style of data transmission handshaking is commonly used with modems or terminal emulation protocols as well as by Teledyne Instrument's APICOM software.
HARDWARE FIFO[2]	**512**	Disables the **HARDWARE FIFO** (First In – First Out), When FIFO is enabled it improves data transfer rate for that COMM port.
COMMAND PROMPT	**4096**	Enables a command prompt when in terminal mode.

[1] Modes are listed in the order in which they appear in the **SETUP → MORE → COMM → COM[1 OR 2] → MODE** menu

[2] The default setting for this feature is **ON.** Do not disable unless instructed to by TAPI's Technical Support personnel.

Note

Communication Modes for each COMM port must be configured independently.

Press the following buttons to select communication modes for a one of the COMM Ports, such as the following example where **RS-485** mode is enabled:

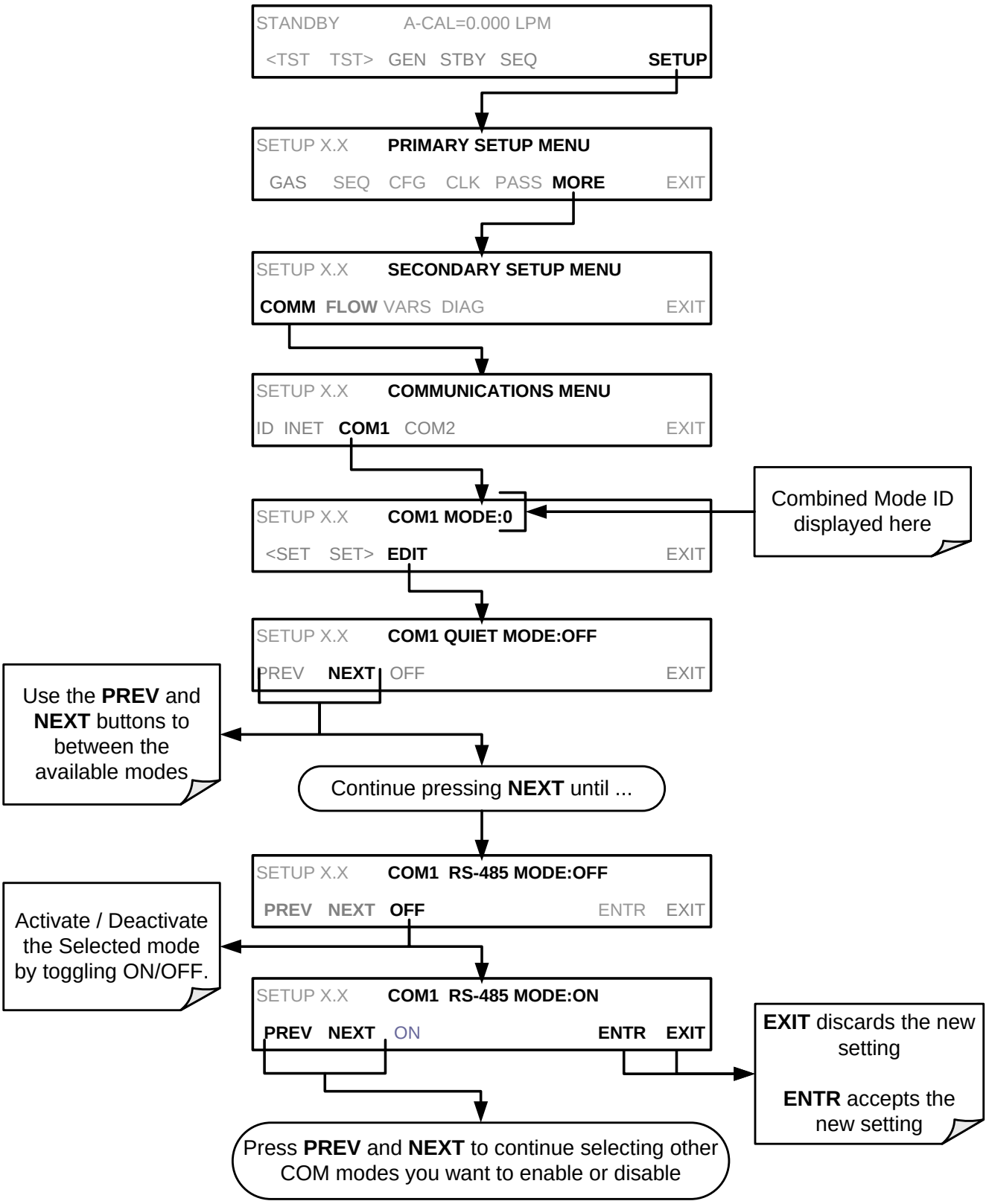

6.1.5. COMM PORT TESTING

The serial ports can be tested for correct connection and output in the **COMM** menu. This test sends a string of 256 'w' characters to the selected COMM port. While the test is running, the red LED on the rear panel of the calibrator should flicker.

To initiate the test, press the following button sequence:

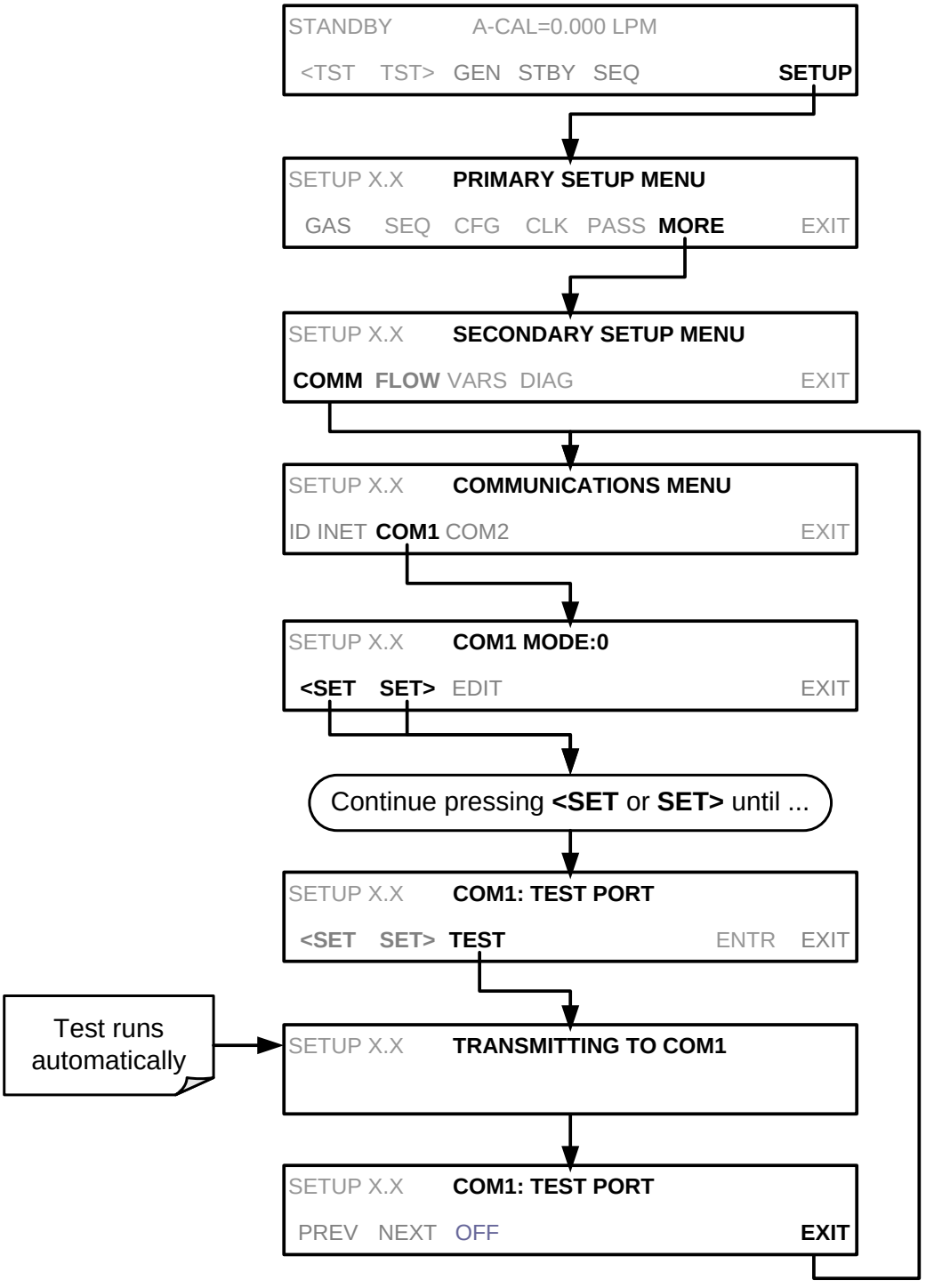

6.1.6. MACHINE ID

Each type of TAPI's calibrator is configured with a default ID code. The default ID code for all T700H calibrators is **700**. The ID number is only important if more than one calibrator is connected to the same communications channel such as when several calibrators are on the same Ethernet LAN (See Section 6.4); in an RS-232 multi-drop chain (See Section 6.2.1) or operating over a RS-485 network (See Section 6.3). If two calibrators of the same model type are used on one channel, the ID codes of one or both of the instruments need to be changed.

To edit the instrument's ID code, press:

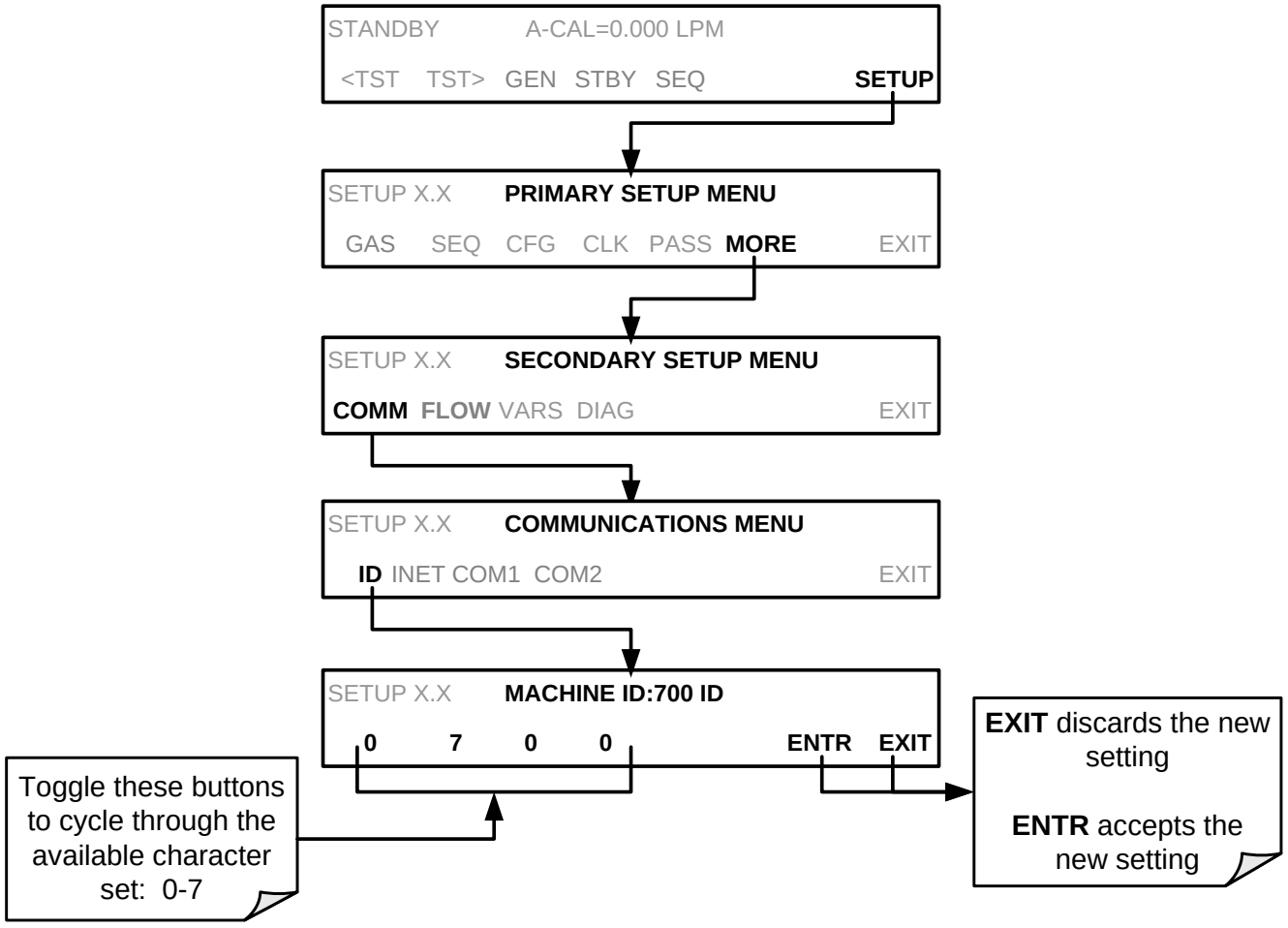

The ID number is only important if more than one calibrator is connected to the same communications channel (e.g., a multi-drop setup). Different models of TAPI's calibrators have different default ID numbers, but if two calibrators of the same model type are used on one channel (for example, two T700H's), the ID of one instrument needs to be changed.

The ID can also be used for to identify any one of several calibrators attached to the same network but situated in different physical locations.

6.1.7. TERMINAL OPERATING MODES

The T700H can be remotely configured, calibrated or queried for stored data through the serial ports. As terminals and computers use different communication schemes, the calibrator supports two communicate modes specifically designed to interface with these two types of devices.

- **Computer mode** is used when the calibrator is connected to a computer with a dedicated interface program.
- **Interactive mode** is used with a terminal emulation programs such as HyperTerminal or a "dumb" computer terminal. The commands that are used to operate the calibrator in this mode are listed in Table 6-2.

6.1.7.1. Help Commands in Terminal Mode

Table 6-2: Terminal Mode Software Commands

COMMAND	Function
Control-T	Switches the calibrator to terminal mode (echo, edit). If mode flags 1 & 2 are OFF, the interface can be used in interactive mode with a terminal emulation program.
Control-C	Switches the calibrator to computer mode (no echo, no edit).
CR (carriage return)	A carriage return is required after each command line is typed into the terminal/computer. The command will not be sent to the calibrator to be executed until this is done. On personal computers, this is achieved by pressing the ENTER button.
BS (backspace)	Erases one character to the left of the cursor location.
ESC (escape)	Erases the entire command line.
? [ID] CR	This command prints a complete list of available commands along with the definitions of their functionality to the display device of the terminal or computer being used. The ID number of the calibrator is only necessary if multiple calibrators are on the same communications line, such as the multi-drop setup.
Control-C	Pauses the listing of commands.
Control-P	Restarts the listing of commands.

6.1.7.2. Command Syntax

Commands are not case-sensitive and all arguments within one command (i.e. ID numbers, keywords, data values, etc.) must be separated with a space character.

All Commands follow the syntax:

X [ID] COMMAND <CR>

Where

X is the command type (one letter) that defines the type of command. Allowed designators are listed in Table 6-3 and Appendix A-6.

[ID] is the machine identification number (Section 6.1.6). Example: the Command "? 700" followed by a carriage return would print the list of available commands for the revision of software currently installed in the instrument assigned ID Number 700.

COMMAND is the command designator: This string is the name of the command being issued (LIST, ABORT, NAME, EXIT, etc.). Some commands may have additional arguments that define how the command is to be executed. Press ? <CR> or refer to Appendix A-6 for a list of available command designators.

<CR> is a carriage return. All commands must be terminated by a carriage return (usually achieved by pressing the ENTER button on a computer).

Table 6-3: TAPI Serial I/O Command Types

COMMAND	COMMAND TYPE
C	Calibration
D	Diagnostic
L	Logon
T	Test measurement
V	Variable
W	Warning

6.1.7.3. Data Types

Data types consist of integers, hexadecimal integers, floating-point numbers, Boolean expressions and text strings.

- Integer data are used to indicate integral quantities such as a number of records, a filter length, etc. They consist of an optional plus or minus sign, followed by one or more digits. For example, *+1*, *-12*, *123* are all valid integers.
- Hexadecimal integer data are used for the same purposes as integers. They consist of the two characters "0x," followed by one or more hexadecimal digits (0-9, A-F, a-f), which is the 'C' programming language convention. No plus or minus sign is permitted. For example, *0x1*, *0x12*, *0x1234abcd* are all valid hexadecimal integers.
- Floating-point numbers are used to specify continuously variable values such as temperature set points, time intervals, warning limits, voltages, etc. They consist of an optional plus or minus sign, followed by zero or more digits, an optional decimal point and zero or more digits. (At least one digit must appear before or after the decimal point.) Scientific notation is not permitted. For example, *+1.0*, *1234.5678*, *-0.1*, *1* are all valid floating-point numbers.
- Boolean expressions are used to specify the value of variables or I/O signals that may assume only two values. They are denoted by the keywords *ON* and *OFF*.
- Text strings are used to represent data that cannot be easily represented by other data types, such as data channel names, which may contain letters and numbers. They consist of a quotation mark, followed by one or more printable characters, including spaces, letters, numbers, and symbols, and a final quotation mark. For example, *"a"*, *"1"*, *"123abc"*, and *"()[]<>"* are all valid text strings. It is not possible to include a quotation mark character within a text string.
- Some commands allow you to access variables, messages, and other items. When using these commands, you must type the entire name of the item; you cannot abbreviate any names.

6.1.7.4. Status Reporting

Reporting of status messages as an audit trail is one of the three principal uses for the RS-232 interface (the other two being the command line interface for controlling the instrument and the download of data in electronic format). You can effectively disable the reporting feature by setting the interface to quiet mode (Section 6.1.4, Table 6-1).

Status reports include warning messages, calibration and diagnostic status messages. Refer to Appendix A-3 for a list of the possible messages, and this for information on controlling the instrument through the RS-232 interface.

GENERAL MESSAGE FORMAT

All messages from the instrument (including those in response to a command line request) are in the format:

X DDD:HH:MM [Id] MESSAGE<CRLF>

Where:

X	is a command type designator, a single character indicating the message type, as shown in the Table 6-3.
DDD:HH:MM	is the time stamp, the date and time when the message was issued. It consists of the Day-of-year (DDD) as a number from 1 to 366, the hour of the day (HH) as a number from 00 to 23, and the minute (MM) as a number from 00 to 59.
[ID]	is the calibrator ID, a number with 1 to 4 digits.
MESSAGE	is the message content that may contain warning messages, test measurements, variable values, etc.
<CRLF>	is a carriage return / line feed pair, which terminates the message.

The uniform nature of the output messages makes it easy for a host computer to parse them into an easy structure. Keep in mind that the front panel display does not give any information on the time a message was issued, hence it is useful to log such messages for trouble-shooting and reference purposes. Terminal emulation programs such as HyperTerminal can capture these messages to text files for later review.

6.1.7.5. COMM Port Password Security

In order to provide security for remote access of the T700H, a LOGON feature can be enabled to require a password before the instrument will accept commands. This is done by turning on the **SECURITY MODE** (Mode 4, Section 6.1.4). Once the **SECURITY MODE** is enabled, the following items apply.

- A password is required before the port will respond or pass on commands.
- If the port is inactive for one hour, it will automatically logoff, which can also be achieved with the LOGOFF command.
- Three unsuccessful attempts to log on with an incorrect password will cause subsequent logins to be disabled for 1 hour, even if the correct password is used.
- If not logged on, the only active command is the '?' request for the help screen.
- The following messages will be returned at logon:
  - LOGON SUCCESSFUL - Correct password given
  - LOGON FAILED - Password not given or incorrect
  - LOGOFF SUCCESSFUL - Connection terminated successfully

To log on to the T700H calibrator with **SECURITY MODE** feature enabled, type:

LOGON 940331

940331 is the default password. To change the default password, use the variable RS232_PASS issued as follows:

V RS232_PASS=NNNNNN

Where N is any numeral between 0 and 9.

6.2. REMOTE ACCESS BY MODEM

The T700H can be connected to a modem for remote access. This requires a cable between the calibrator's COMM port and the modem, typically a DB-9F to DB-25M cable (available from TAPI with P/N WR0000024).

Once the cable has been connected, check to ensure that:

- The DTE-DCE is in the DCE position.
- The T700H COMM port is set for a baud rate that is compatible with the modem.
- The Modem is designed to operate with an 8-bit word length with one stop bit.
- The **MODEM ENABLE** communication mode is turned **ON** (Mode 64, see Section 6.1.4).

Once this is completed, the appropriate setup command line for your modem can be entered into the calibrator. The default setting for this feature is:

AT Y0 &D0 &H0 &I0 S0=2 &B0 &N6 &M0 E0 Q1 &W0

This string can be altered to match your modem's initialization and can be up to 100 characters long.

To change this setting, press:

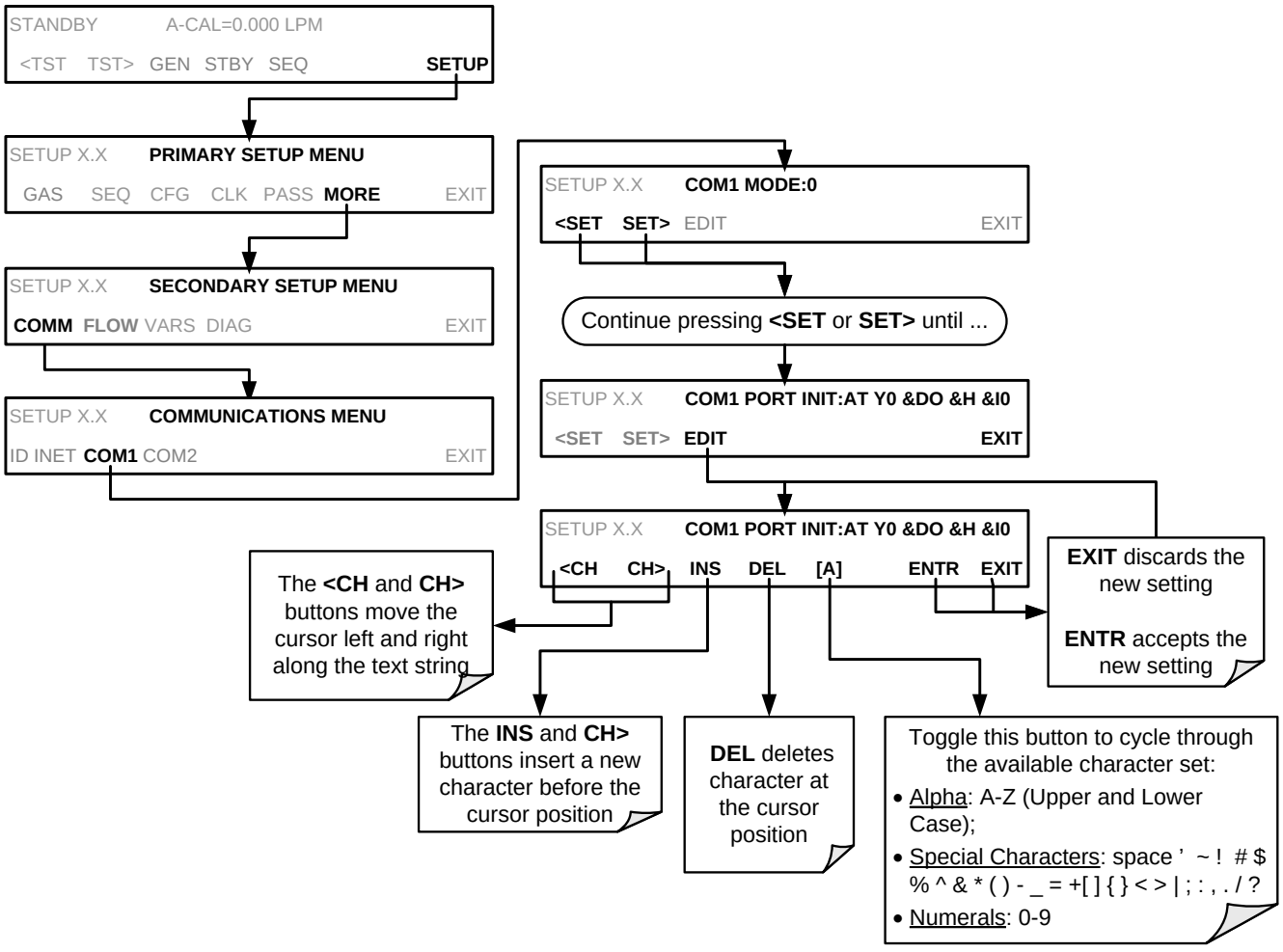

To initialize the modem, press:

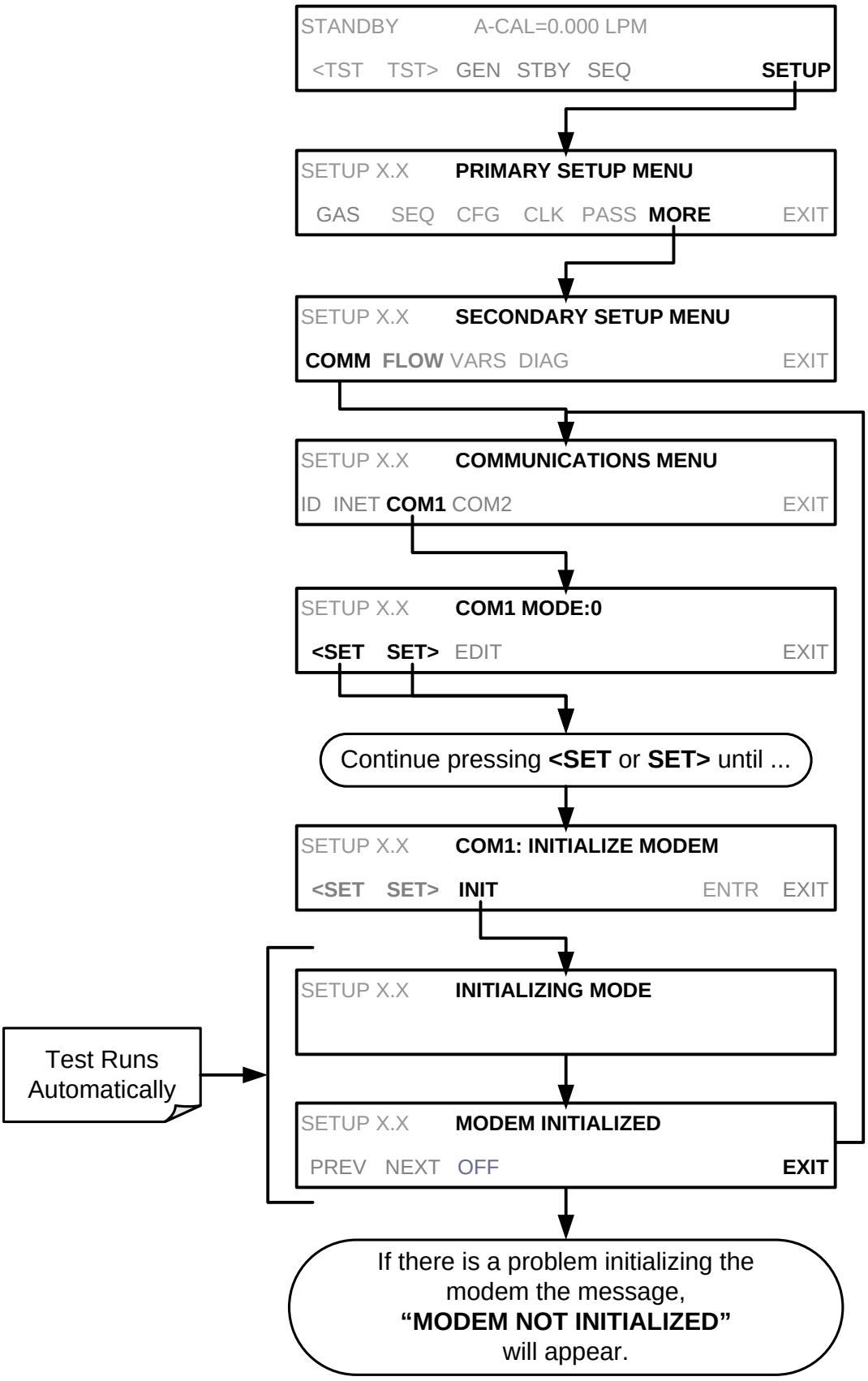

6.2.1. MULTI-DROP RS-232 SET UP

When the RS-232 Multidrop option is installed, connection adjustments and configuration through the menu system are required. This section provides instructions for the internal connection adjustments, then for external connections, and ends with instructions for menu-driven configuration.

Note that because the RS-232 Multidrop option uses both the **RS232** and **COM2** DB9 connectors on the analyzer's rear panel to connect the chain of instruments, **COM2** port is no longer available for separate RS-232 or RS-485 operation.

CAUTION – Risk of Instrument Damage and Warranty Invalidation

Printed circuit assemblies (PCAs) are sensitive to electro-static discharges too small to be felt by the human nervous system. Damage resulting from failure to use ESD protection when working with electronic assemblies will void the instrument warranty.

For more information on preventing ESD damage, see *A Primer on Electro-Static Discharge* our website at http://www.teledyne-api.com under Help Center > Product Manuals in the Special Manuals section.

In each instrument with the Multidrop option there is a shunt jumpering two pins on the serial Multidrop and LVDS printed circuit assembly (PCA), as shown in Figure 6-3. This shunt must be removed from all instruments except that designated as last in the multidrop chain, which must remain terminated. This requires powering off and opening each instrument and making the following adjustments:

1. With **NO power** to the instrument, remove its top cover and lay the rear panel open for access to the Multidrop/LVDS PCA, which is seated on the CPU.
2. On the Multidrop/LVDS PCA's JP2 connector, remove the shunt that jumpers Pins 21 ↔ 22 as indicated in Figure 6-3 (Do this for all but the last instrument in the chain where the shunt should remain at Pins 21 ↔ 22).
3. Check that the following cable connections are made in *all* instruments (again refer to Figure 6-3):
   - J3 on the Multidrop/LVDS PCA connects to the CPU's COM1 connector (Note that the CPU's COM2 connector is not used in Multidrop)
   - J4 on the Multidrop/LVDS PCA connects to J12 on the motherboard
   - J1 on the Multidrop/LVDS PCA connects to the front panel LCD

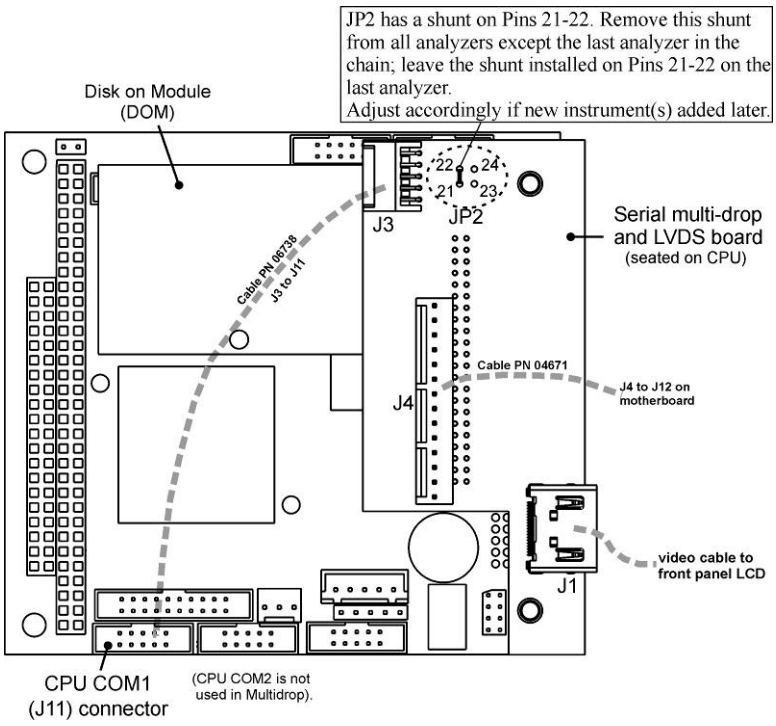

Figure 6-3. Jumper and Cables for Multidrop Mode

4. Close the instrument.
5. Referring to Figure 6-4, use straight-through DB9 male-DB9 female cables to interconnect the host RS232 port to the first analyzer's RS232 port; then from the first analyzer's COM2 port to the second analyzer's RS232 port; from the second analyzer's COM2 port to the third analyzer's RS232 port, etc., connecting in this fashion up to eight analyzers, subject to the distance limitations of the RS-232 standard.
6. On the rear panel of each analyzer, adjust the DCE DTE switch so that the green and the red LEDs (RX and TX) of the COM1 connector (labeled RS232) are both lit. (Ensure you are using the correct RS-232 cables internally wired specifically for RS-232 communication; see Section 4.4.1)

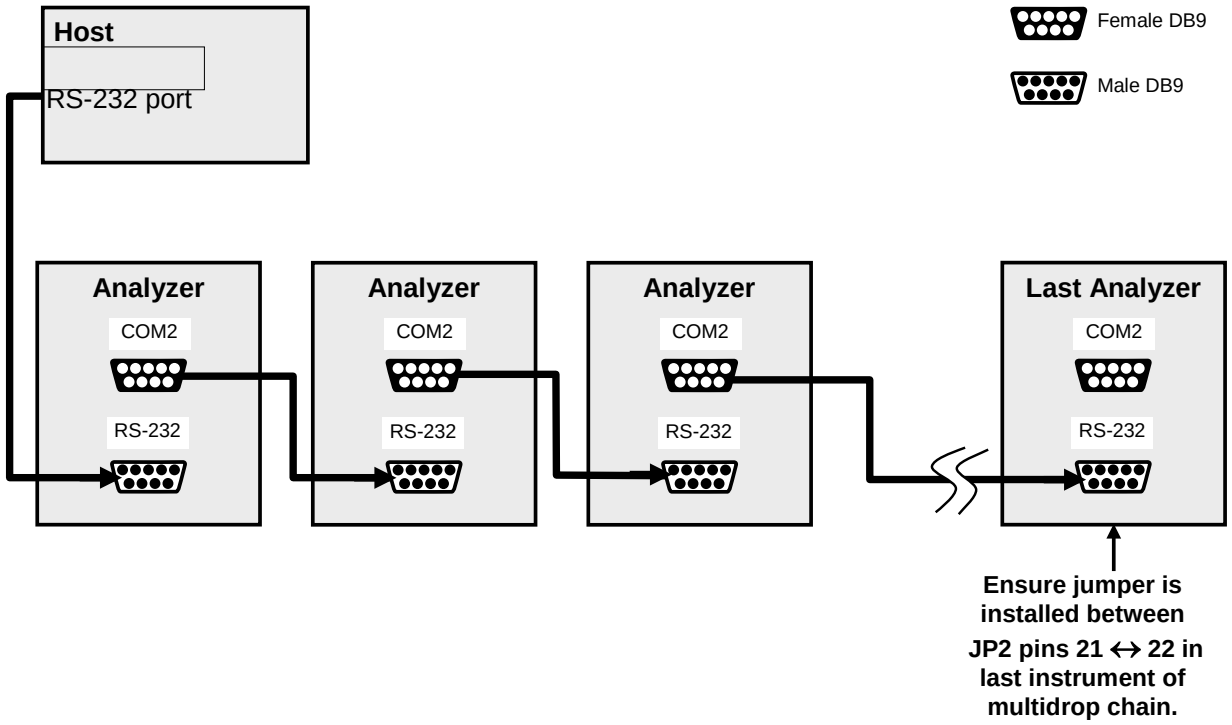

Figure 6-4. RS-232-Multidrop Host/Analyzer Interconnect Diagram

7. BEFORE communicating from the host, power on the instruments and check that the Machine ID (Section 6.1.6) is unique for each.
   a. In the SETUP Mode menu go to SETUP>MORE>COMM>ID. The default ID is typically either the model number or "0".
   b. To change the identification number, press the button below the digit to be changed.
   c. Press/select ENTER to accept the new ID for that instrument.
8. Next, in the SETUP>MORE>COMM>COM1 menu (do not use the COM2 menu for multidrop), edit the COM1 MODE parameter as follows: press/select EDIT and set only QUIET MODE, COMPUTER MODE, and MULTIDROP MODE to ON. Do not change any other settings.
9. Press/select ENTER to accept the changed settings, and ensure that COM1 MODE now shows 35.
10. Press/select SET> to go to the COM1 BAUD RATE menu and ensure it reads the same for all instruments (edit as needed so that all instruments are set at the same baud rate).

Note that the (communication) Host instrument can only address one instrument at a time, each by its unique ID (see Step 7 above).

6.3. RS-485 CONFIGURATION OF COM2

As delivered from the factory, COM2 is configured for RS-232 communications. This port can be reconfigured for operation as a non-isolated, half-duplex RS-485 port. To configure the instrument for RS-485 communication, please contact the factory. (Using COM2 for RS-485 communications disables the optional USB com port).

6.4. REMOTE ACCESS VIA THE USB PORT (OPTION)

The calibrator can be connected to a personal computer by direct connection through their respective USB ports.

1. Install the Teledyne T-Series USB driver on your computer, downloadable from the TAPI website under Help Center>Software Downloads (www.teledyne-api.com/software).
2. Run the installer file: "TAPIVCPInstaller.exe"

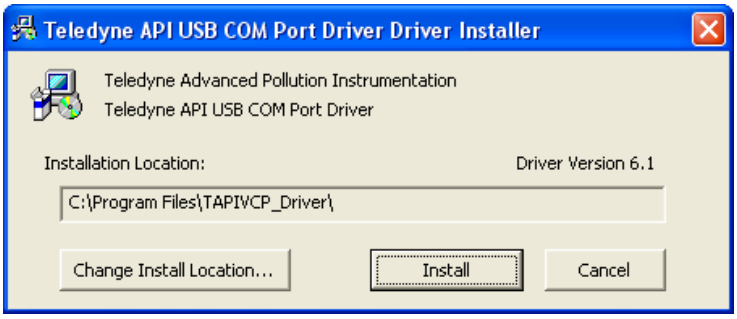

3. Connect the USB cable between the USB ports on your personal computer and your calibrator. The USB cable should be a Type A – Type B cable, commonly used as a USB printer cable.
4. Determine the Windows XP Com Port number that was automatically assigned to the USB connection. (Start → Control Panel → System → Hardware → Device Manager). This is the com port that should be set in the communications software, such as APICOM or Hyperterminal.

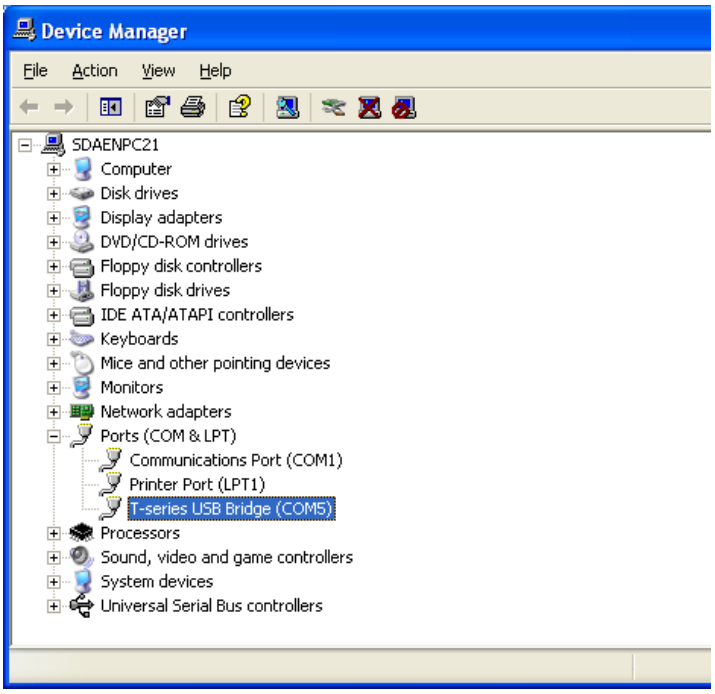

Refer to the *Quick Start (Direct Cable Connection)* section of the APICOM Manual, PN 07463.

5. In the instrument's SETUP>MORE>COMM>COM2 menu, make the following settings:

   Baud Rate: 115200

   COM2 Mode Settings:

Quiet Mode	ON
Computer Mode	ON
MODBUS RTU	OFF
MODBUS ASCII	OFF
E,8,1 MODE	OFF
E,7,1 MODE	OFF
RS-485 MODE	OFF
SECURITY MODE	OFF
MULTIDROP MODE	OFF
ENABLE MODEM	OFF
ERROR CHECKING	ON
XON/XOFF HANDSHAKE	OFF
HARDWARE HANDSHAKE	OFF
HARDWARE FIFO	ON
COMMAND PROMPT	OFF

6. Next, configure your communications software, such as APICOM. Use the COM port determined in step 4 and the baud rate set in step 5. The figures below show how these parameters would be configured in the Instrument Properties window in APICOM when configuring a new instrument. See the APICOM manual (PN 07463) for more details.

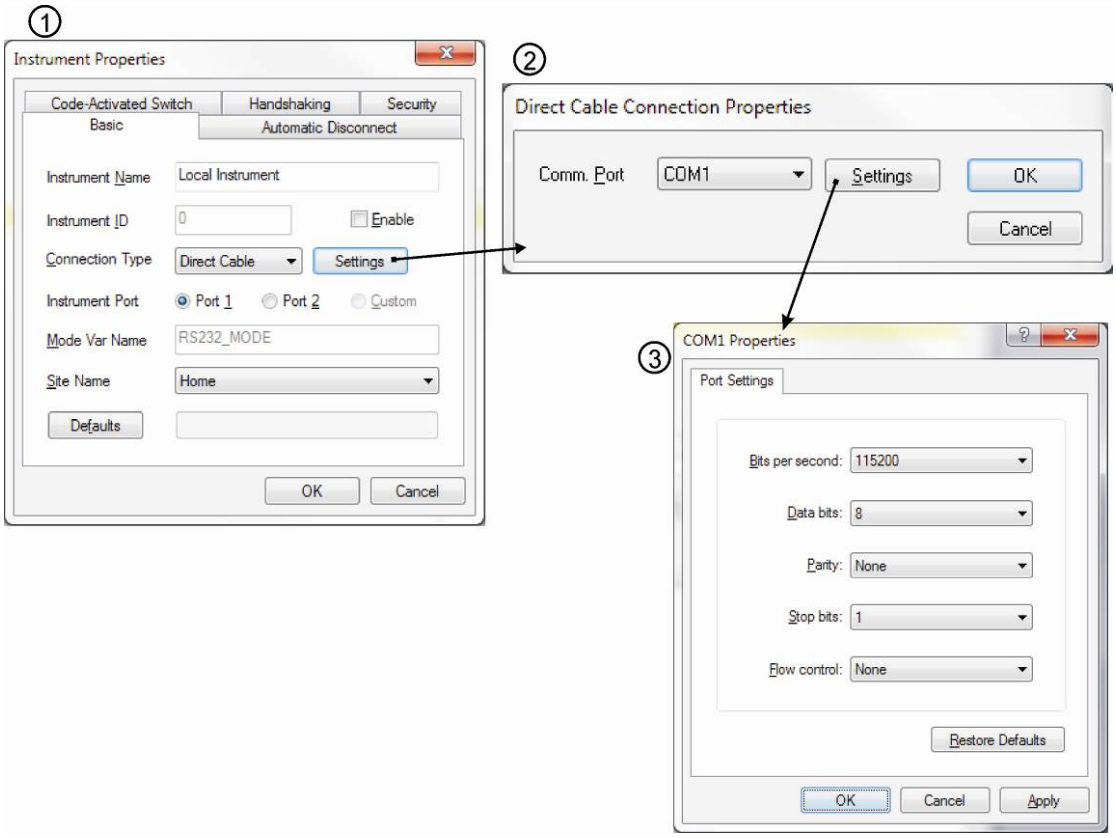

6.5. REMOTE ACCESS VIA THE ETHERNET

Via the Ethernet interface, the calibrator can be connected to any standard 10BaseT or 100BaseT Ethernet network via low-cost network hubs, switches or routers. The interface operates as a standard TCP/IP device on port 3000. This allows a remote computer to connect through the Internet to the calibrator using APICOM, terminal emulators or other programs.

Under the SETUP>MORE>COMM menu the **INET** submenu is used to manage and configure the Ethernet interface with your LAN or Internet Server(s). The calibrator is shipped with DHCP enabled by default. This allows the instrument to be connected to a network or router with a DHCP server (Section 6.5.1), but for a permanent Ethernet connection, configure the instrument with a static IP address (Section 6.5.1.1).

The Ethernet LEDs located on the connector indicate the Ethernet connection status.

Table 6-4: Ethernet Status Indicators

LED	FUNCTION
amber (link)	On when connection to the LAN is valid.
green (activity)	Flickers during any activity on the LAN.

6.5.1. CONFIGURING THE ETHERNET INTERFACE USING DHCP

The Ethernet feature for your T700H uses Dynamic Host Configuration Protocol (DHCP) to configure its interface with your LAN automatically. This requires your network servers also be running DHCP. The calibrator will do this the first time you turn the instrument on after it has been physically connected to your network. Once the instrument is connected and turned on, it will appear as an active device on your network without any extra set up steps or lengthy procedures.

NOTE

It is a good idea to check the INET settings the first time you power up your calibrator after it has been physically connected to the LAN/Internet to ensure that the DHCP has successfully downloaded the appropriate information from you network server(s).

Table 6-5: LAN/Internet Configuration Properties

PROPERTY	DEFAULT STATE	DESCRIPTION
DHCP STATUS	On	This displays whether the DHCP is turned ON or OFF.
INSTRUMENT IP ADDRESS	0.0.0.0	This string of four packets of 1 to 3 numbers each (e.g. 192.168.76.55.) is the address of the calibrator itself.
GATEWAY IP ADDRESS	0.0.0.0	A string of numbers very similar to the Instrument IP address (e.g. 192.168.76.1.) that is the address of the computer used by your LAN to access the Internet.
SUBNET MASK	0.0.0.0	Also, a string of four packets of 1 to 3 numbers each (e.g. 255.255.252.0) that defines that identifies the LAN to which the device is connected. All addressable devices and computers on a LAN must have the same subnet mask. Any transmissions sent devices with different subnet masks are assumed to be outside of the LAN and are routed through a different gateway computer onto the Internet.
TCP PORT[1]	**3000**	This number defines the terminal control port by which the instrument is addressed by terminal emulation software, such as Internet or TAPI's APICOM.
HOST NAME	**T700H**	The name by which your calibrator will appear when addressed from other computers on the LAN or via the Internet. While the default setting for all TAPI's T700H calibrators is "T700H", the host name may be changed to fit customer needs.
[1] Do not change the setting for this property unless instructed to by TAPI's Technical Support personnel.		

NOTE

If the gateway IP, instrument IP and the subnet mask are all zeroes (e.g. "0.0.0.0"), the DCHP was not successful in which case you may have to configure the calibrator's Ethernet properties manually.

See your network administrator.

To view the above properties listed in Table 6-5, press:

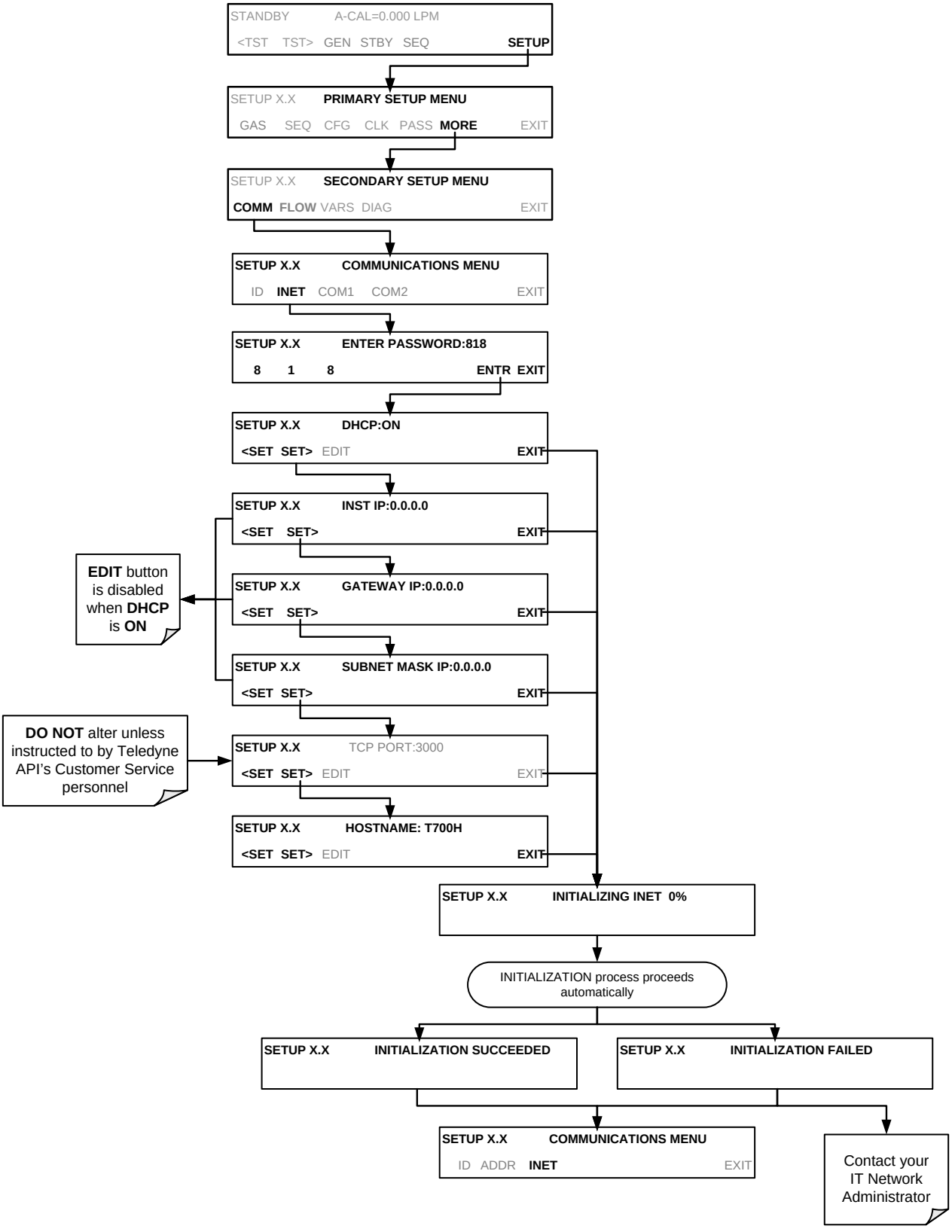

6.5.1.1. Manually Configuring the Network IP Addresses

There are several circumstances when you may need to manually set the Ethernet configuration:

- Your LAN is not running a DHCP software package,
- The DHCP software is unable to initialize the calibrator's interface;
- You wish to configure the interface with a specific IP address, such as for a permanent Ethernet connection..

Manually configuring the Ethernet interface requires that you first turn DHCP to OFF before setting the **INSTRUMENT IP**, **GATEWAY IP** and **SUBNET MASK** parameters:

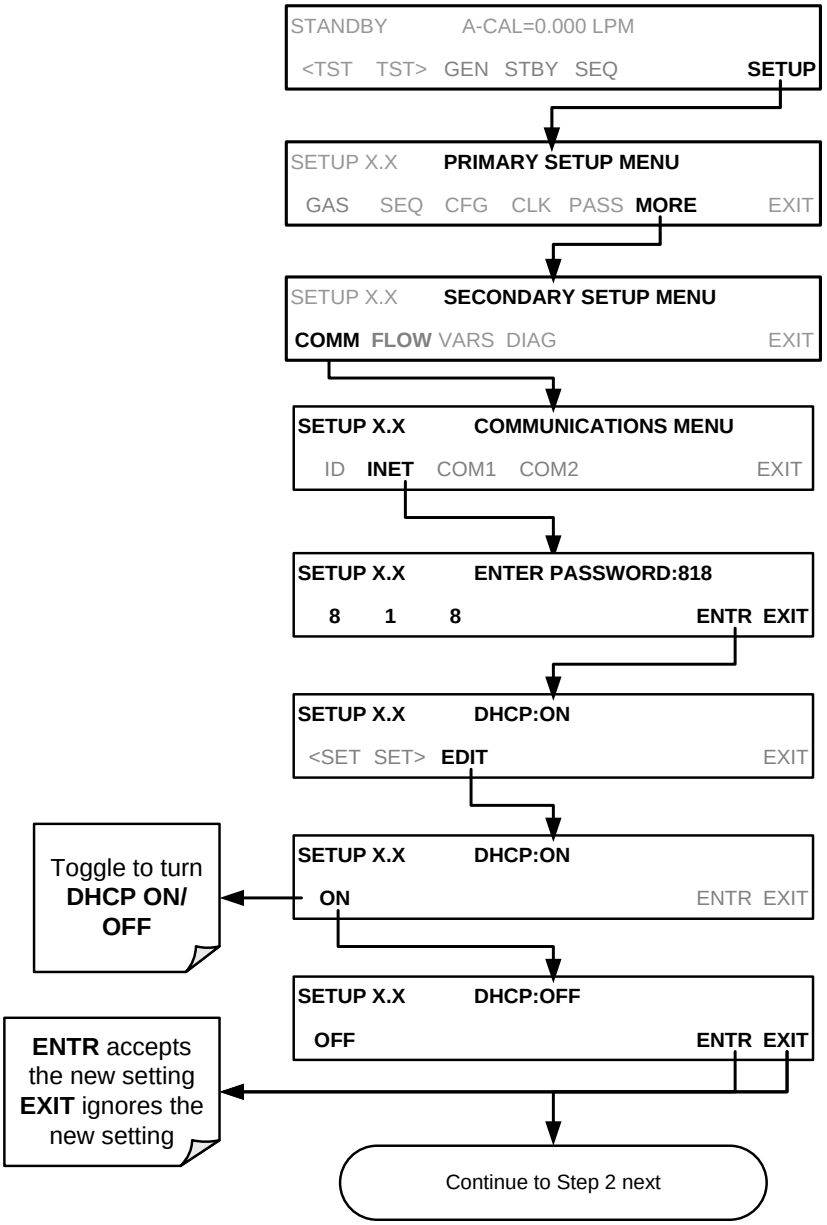

Internet Configuration Touchscreen Button Functions

BUTTON	FUNCTION
[0]	Press to cycle through the range of numerals and available characters (“**0 – 9**” & “ **.** ”)
<CH CH>	Moves the cursor one character left or right.
DEL	Deletes a character at the cursor location.
ENTR	Accepts the new setting and returns to the previous menu.
EXIT	Ignores the new setting and returns to the previous menu.
Some buttons only appear when applicable.	

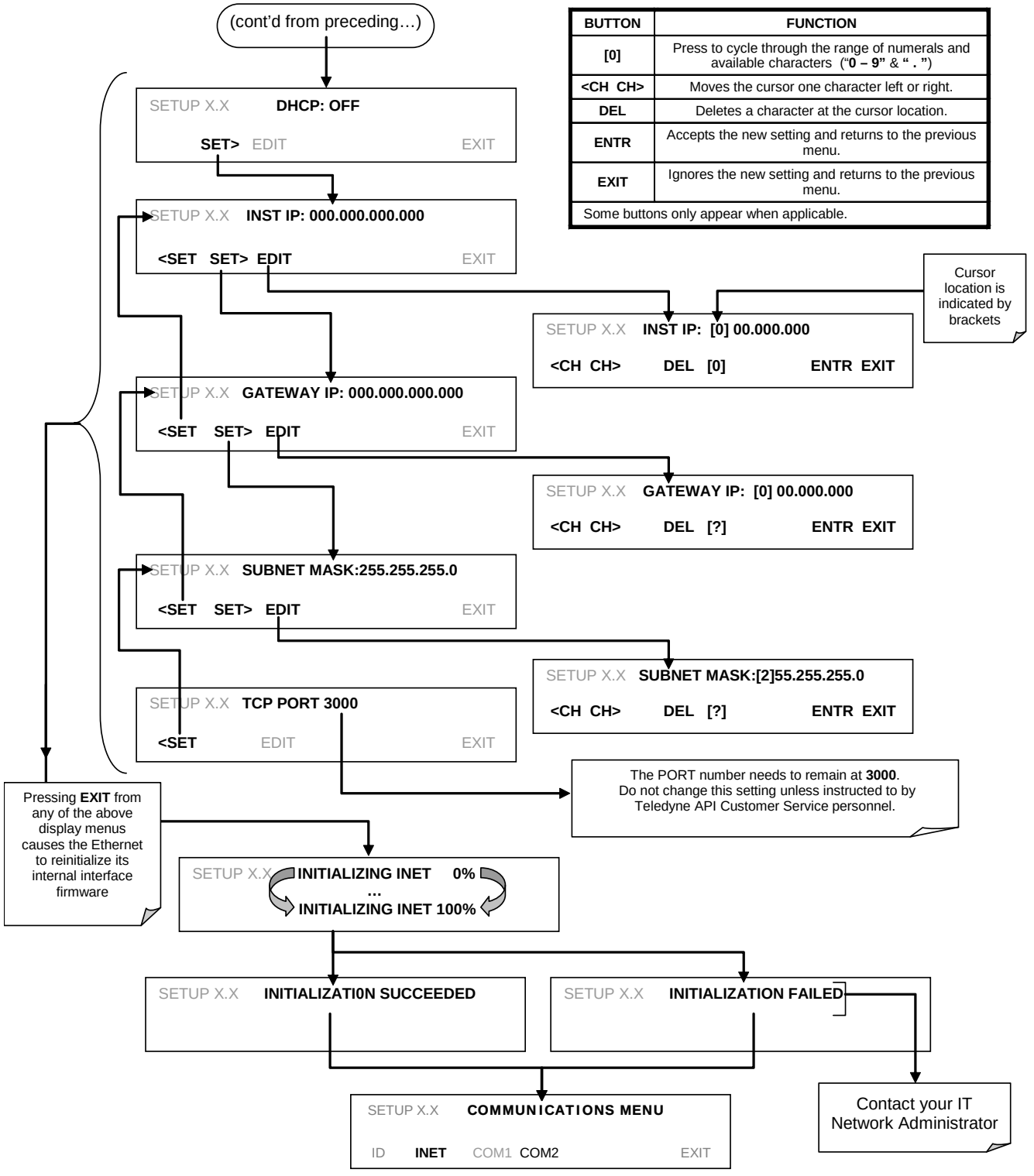

6.5.2. CHANGING THE CALIBRATOR'S HOSTNAME

The **HOSTNAME** is the name by which the calibrator appears on your network. The default name for all TAPI's T700H calibrators is **T700H**. To change this name (particularly if you have more than one T700H calibrator on your network), press.

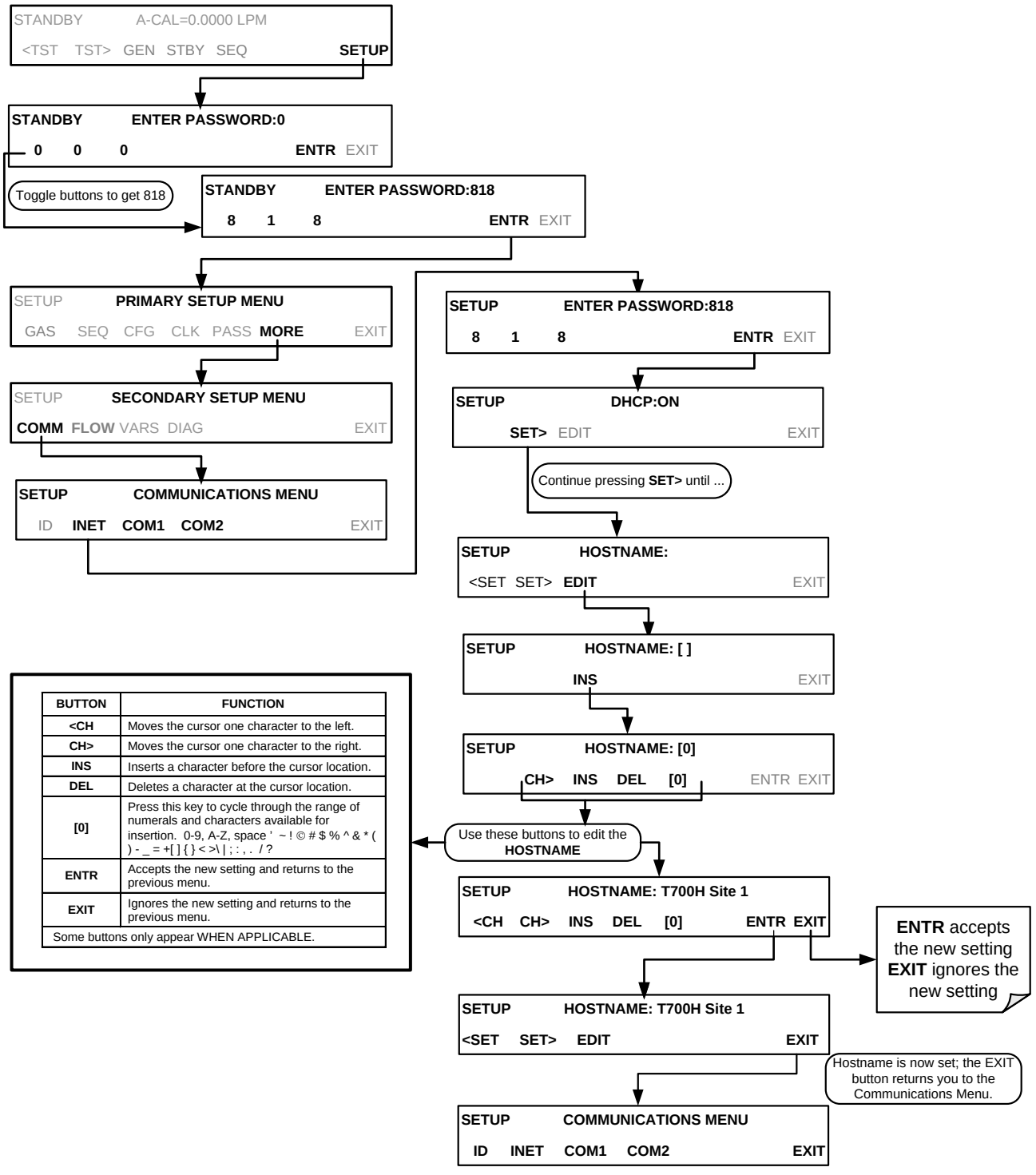

BUTTON	FUNCTION
<CH	Moves the cursor one character to the left.
CH>	Moves the cursor one character to the right.
INS	Inserts a character before the cursor location.
DEL	Deletes a character at the cursor location.
[0]	Press this key to cycle through the range of numerals and characters available for insertion. 0-9, A-Z, space ' ~ ! © # $ % ^ & * ( ) - _ = +[ ] { } < >\ | ; : , . / ?
ENTR	Accepts the new setting and returns to the previous menu.
EXIT	Ignores the new setting and returns to the previous menu.
Some buttons only appear WHEN APPLICABLE.	

6.6. MODBUS QUICK SETUP

The following set of instructions assumes that the user is familiar with MODBUS communications, and provides minimal information to get started. For additional instruction, please refer to the TAPI MODBUS manual, PN 06276. Also refer to www.modbus.org for MODBUS communication protocols.

Minimum Requirements

- Instrument firmware with MODBUS capabilities installed.
- MODBUS-compatible software (TAPI uses MODBUS Poll for testing; see www.modbustools.com)
- Personal computer
- Communications cable (Ethernet or USB or RS232)
- Possibly a null modem adapter or cable

Actions

Set Com Mode parameters Comm	Ethernet: Using the front panel menu, go to SETUP – MORE – COMM – INET; scroll through the INET submenu until you reach TCP PORT 2 (the standard setting is 502), then continue to TCP PORT 2 MODBUS TCP/IP; press EDIT and toggle the menu button to change the setting to ON, then press ENTR. (Change Machine ID if needed: see "Slave ID"). USB/RS232: Using the front panel menu, go to SETUP – MORE – COMM – COM2 – EDIT; scroll through the COM2 EDIT submenu until the display shows COM2 MODBUS RTU: OFF (press OFF to change the setting to ON. Scroll NEXT to COM2 MODBUS ASCII and ensure it is set to OFF. Press ENTR to keep the new settings. (If RTU is not available with your communications equipment, set the COM2 MODBUS ASCII setting to ON and ensure that COM2 MODBUS RTU is set to OFF. Press ENTR to keep the new settings).
Slave ID	A MODBUS slave ID must be set for each instrument. Valid slave ID's are in the range of 1 to 247. If your analyzer is connected to a serial network (i.e. RS-485), a unique Slave ID must be assigned to each instrument. To set the slave ID for the instrument, go to SETUP – MORE – COMM – ID. The default MACHINE ID is the same as the model number. Toggle the menu buttons to change the ID.
Reboot analyzer	For the settings to take effect, power down the analyzer, wait 5 seconds, and power up the analyzer.
Make appropriate cable connections	Connect your analyzer either: • via its Ethernet or USB port to a PC (this may require a USB-to-RS232 adapter for your PC; if so, also install the software driver from the CD supplied with the adapter, and reboot the computer if required), or • via its COM2 port to a null modem (this may require a null modem adapter or cable).
Specify MODBUS software settings (examples used here are for MODBUS Poll software)	1. Click Setup / [Read / Write Definition] /. a. In the Read/Write Definition window (see example that follows) select a **Function** (what you wish to read from the analyzer). b. Input **Quantity** (based on your firmware's register map). c. In the View section of the Read/Write Definition window select a **Display** (typically Float Inverse). d. Click **OK**. 2. Next, click Connection/Connect. a. In the Connection Setup window (see example that follows), select the options based on your computer. b. Press **OK**.
Read the Modbus Poll Register	Use the Register Map to find the test parameter names for the values displayed (see example that follows If desired, assign an alias for each.

Example Read/Write Definition window:

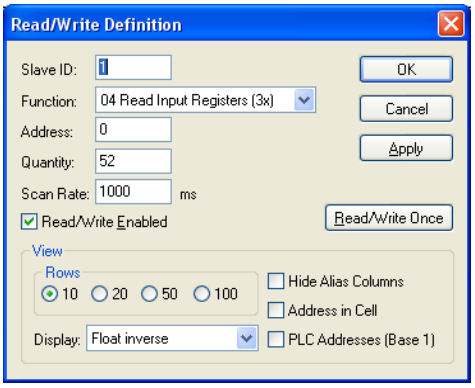

Example Connection Setup window:

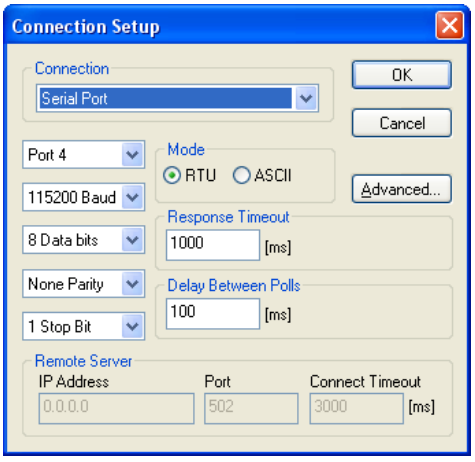

Example MODBUS Poll window:

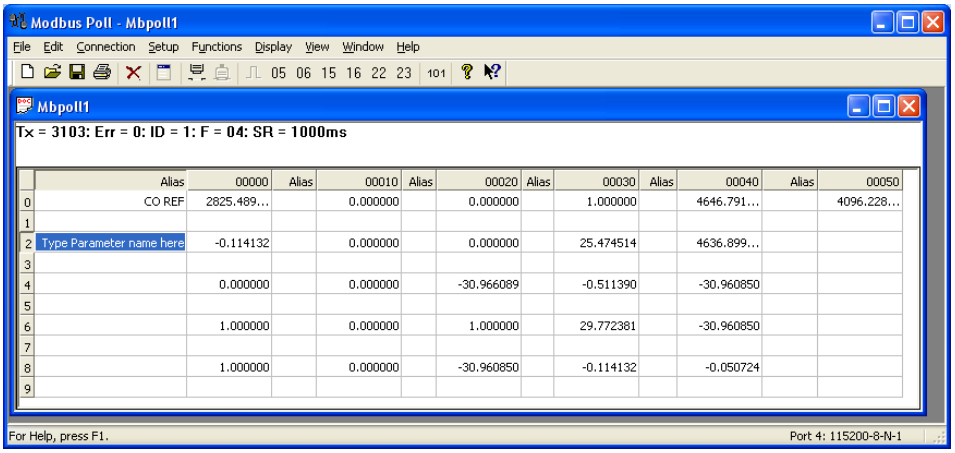

6.7. APICOM REMOTE CONTROL PROGRAM

APICOM is an easy-to-use, yet powerful interface program that allows the user to access and control any of TAPI's main line of ambient and stack-gas instruments from a remote connection through direct cable, modem or Ethernet. Running APICOM, a user can:

- Establish a link from a remote location to the T700H through direct cable connection via RS-232 modem or Ethernet.
- View the instrument's front panel and remotely access all functions that could be accessed when standing in front of the instrument.
- Remotely edit system parameters and set points.
- Download, view, graph and save data for predictive diagnostics or data analysis.
- Check on system parameters for trouble-shooting and quality control.

APICOM is very helpful for initial setup, data analysis, maintenance and trouble-shooting. Figure 6-5 shows an example of APICOM's main interface, which emulates the look and functionality of the instrument's actual front panel.

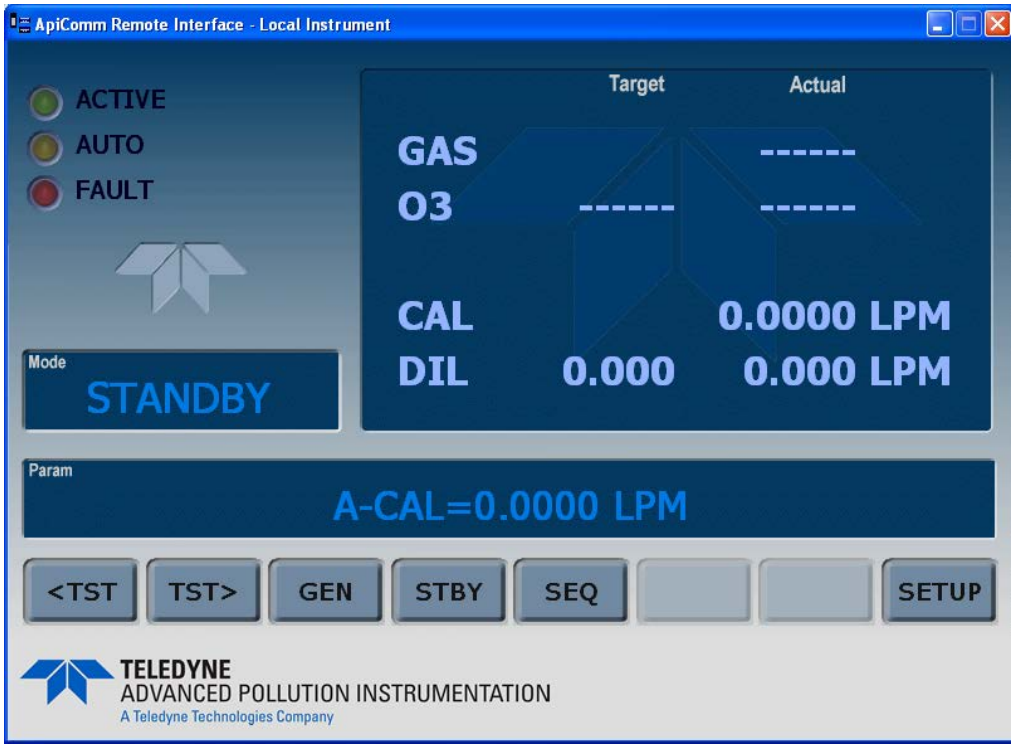

Figure 6-5: APICOM Remote Control Program Interface

NOTE

APICOM is included free of cost with the calibrator and the latest versions can also be downloaded at http://www.teledyne-api.com/software/APICOM/. The APICOM manual, which includes setup instructions, is also downloadable at http://www.teledyne-api.com/manuals/ under Help Center>Product Manuals

The T700H calibrator is fully supported by APICOM revision 5 and later.

This page intentionally left blank.

7. CALIBRATION AND VERIFICATION

Basic electronic calibration of the T700H Source Monitoring Dilution Calibrator is performed at the factory. Normally there is no need to perform this factory calibration in the field however, the performance of several of the instrument's key subsystems should be verified periodically and if necessary adjusted. These subsystems are:

- Mass Flow Controllers: The accuracy of the mass flow controller outputs is intrinsic to achieving the correct calibration mixture concentrations, therefore the accuracy of their output should be checked and if necessary adjusted every 6 months (see Sections 7.1 and 7.2).
- O_3 Generator: Should be periodically calibrated (see Section 7.3).

7.1. VIEWING THE PERFORMANCE STATISTICS FOR THE T700H'S MFC'S

It is possible to view the target flow rate, actual flow rate and actual gas pressure for each MFC via the **FLOW** submenu in the T700H calibrator (in real time). To access this information, press:

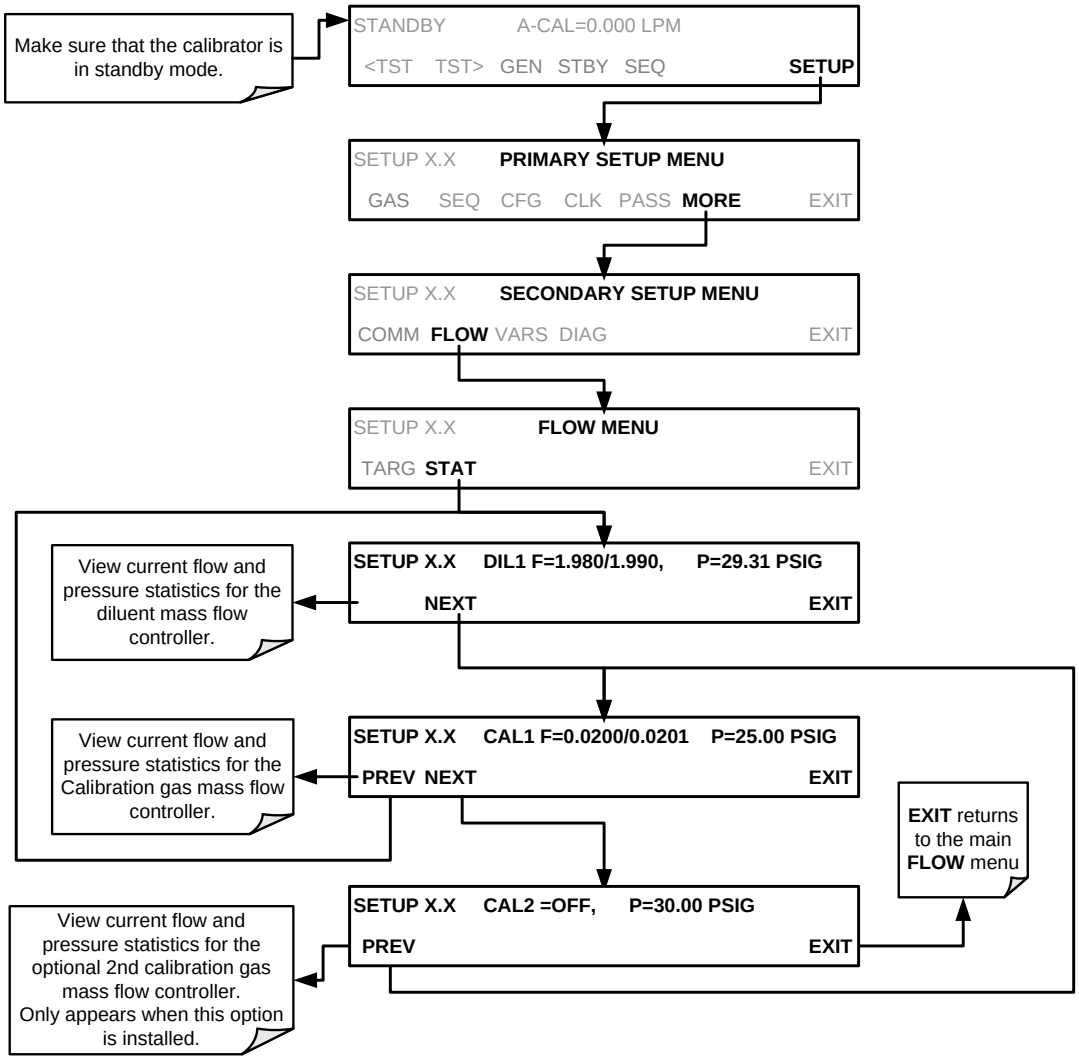

In the displays associated with the **FLOW → STAT** submenu:

- The numbers after "F=" are the flow.
- The first number is the target flow.
- The second is the actual flow.
- The number after "P=" is pressure in PSIG.
- If an MFC is off, its flows are displayed as OFF.

7.2. CALIBRATING THE OUTPUT OF THE T700H'S MFC'S

A table exists in the memory of the T700H's for each MFC that sets the output of the MFC at each of 20 equally spaced control points along its entire performance range. This table may be accesses via the **DIAG → MFC CONFIGURATION** submenu (see Section 7.2.2).

For each calibration point, the following is displayed:

- The drive voltage in 20 equal, incremental steps from 0 mVDC to 5000 mVDC;
- The expected flow rate corresponding to each drive voltage point (each equal to1/20th of the full scale for the selected mass flow controller).

This table can also be used to calibrate the output of the MFCs by adjusting either the control voltage of a point or its associated flow output value (see Section 7.2.2).

Table 7-1: Examples of MFC Calibration Points

CAL POINT	DRIVE VOLTAGE	MFC FULL SCALE			
		1.0 LPM	3.0 LPM	5.0 LPM	10.0 LPM
		MFC TARGET OUTPUT			
0	000 mV	0.000	0.000	0.000	0.000
1	250 mV	0.050	0.150	0.250	0.500
2	500 mV	0.100	0.300	0.500	1.000
3	750 mV	0.150	0.450	0.750	1.500
4	1000 mV	0.200	0.600	1.000	2.000
5	1250 mV	0.250	0.750	1.250	2.500
6	1500 mV	0.300	0.900	1.500	3.000
7	1750 mV	0.350	1.050	1.750	3.500
8	2000 mV	0.400	1.200	2.000	4.000
9	2250 mV	0.450	1.350	2.250	4.500
10	2500 mV	0.500	1.500	2.500	5.000
11	2750 mV	0.550	1.650	2.750	5.500
12	3000 mV	0.600	1.800	3.000	6.000
13	3250 mV	0.650	1.950	3.250	6.500
14	3500 mV	0.700	2.100	3.500	7.000
15	3750 mV	0.750	2.250	3.750	7.500
16	4000 mV	0.800	2.400	4.000	8.000
17	4250 mV	0.850	2.550	4.250	8.500
18	4500 mV	0.900	2.700	4.500	9.000
19	4750 mV	0.950	2.850	4.750	9.500
20	5000 mV	1.000	3.000	5.000	10.000

7.2.1. SETUP FOR VERIFICATION AND CALIBRATION OF THE MFC'S

NOTE

An external calibrated flow standard is required for the procedure.

1. Turn off the T700H calibrator.
2. Open the front panel to the T700H calibrator. This is the easiest access to the MFC output ports.

- A locking screw located at the top center of the front panel (See Figure 3-1) must be removed before the panel can be opened.

3. Attach the flow meter directly to the output port of the MFC to be checked/tested.

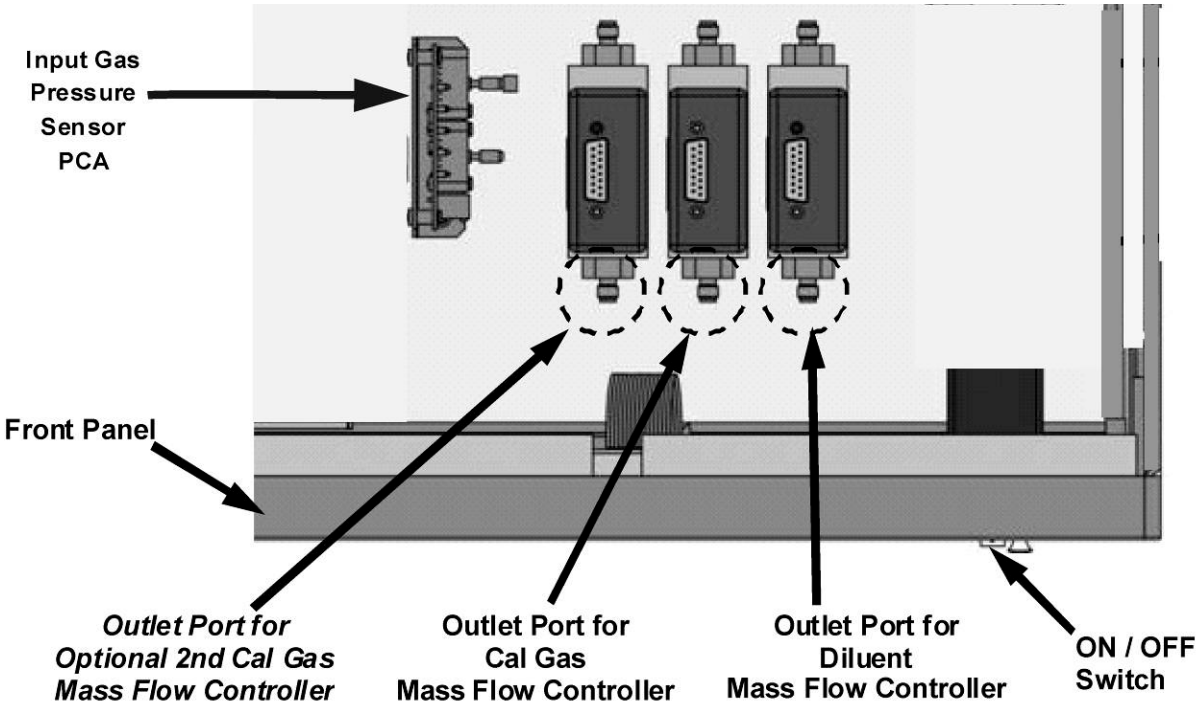

Figure 7-1: Location of MFC Outlet Ports

4. Turn the T700H Source Monitoring Dilution Calibrator ON.

7.2.2. VERIFYING AND CALIBRATING THE T700H'S MFC'S

Once the external flow meter is connected to the output of the MFC being verified/calibrated, perform the following steps:

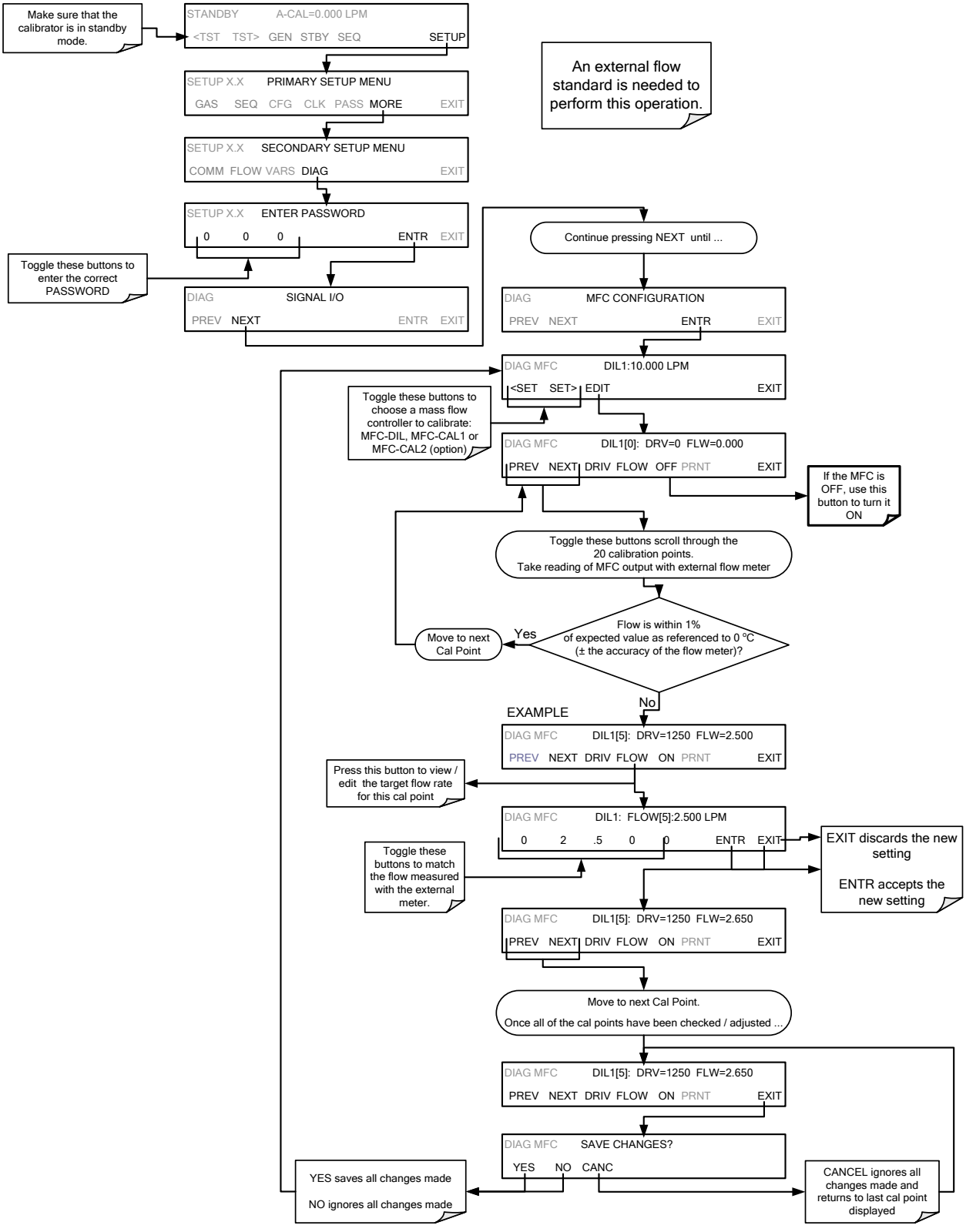

7.3. CALIBRATING THE O_3 GENERATOR

7.3.1. SETUP FOR VERIFICATION AND CALIBRATION THE O_3 GENERATOR

NOTE

An external ozone monitor capable of measuring up to 500 ppm of ozone is required for the procedure. Note that typical air pollution type ozone analyzers cannot be used to measure these concentration levels. Contact TAPI for information on appropriate products for performing this procedure.

7.3.1.1. Setup Using Direct Connections

Figure 7-2 shows the ozone monitor connected directly to the fixtures on the back of the T700H Calibrator.

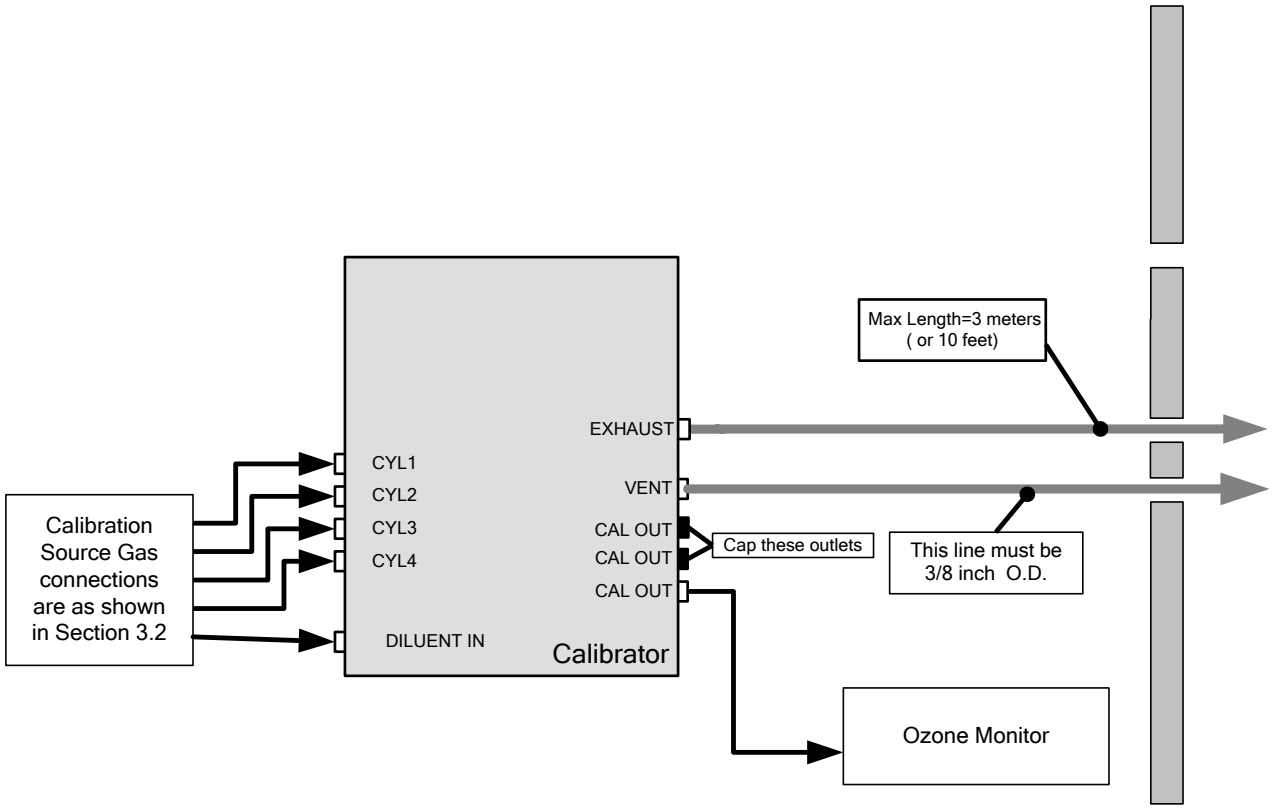

Figure 7-2: O_3 Generator Calibration Setup – Direct Connections

7.3.2. O_3 GENERATOR CALIBRATION PROCEDURE

The T700H calibrator's software includes a routine for calibration the O_3 generator. A table of drive voltages stored in the T700H's memory is the basis for this calibration. For each point included in the table used by the T700H to calibrate the O_3 generator the user can set a drive voltage and a dwell time for that point. Each point can also be individually turned OFF or ON.

7.3.2.1. Viewing O_3 Generator Calibration Points

To view these calibration points, press:

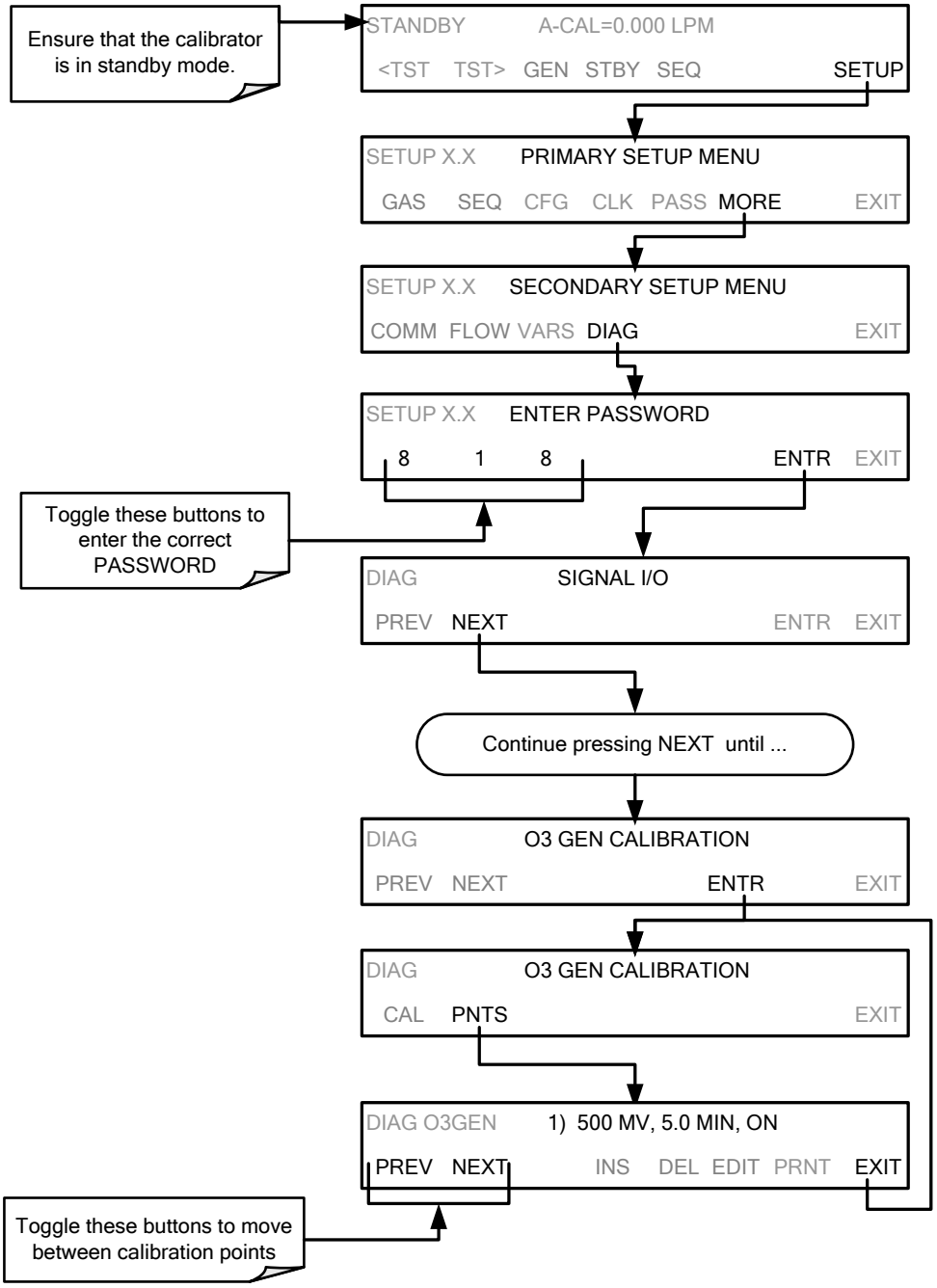

7.3.2.2. Adding or Editing O_3 Generator Calibration Points

To add a calibration point to the table or edit an existing point, press:

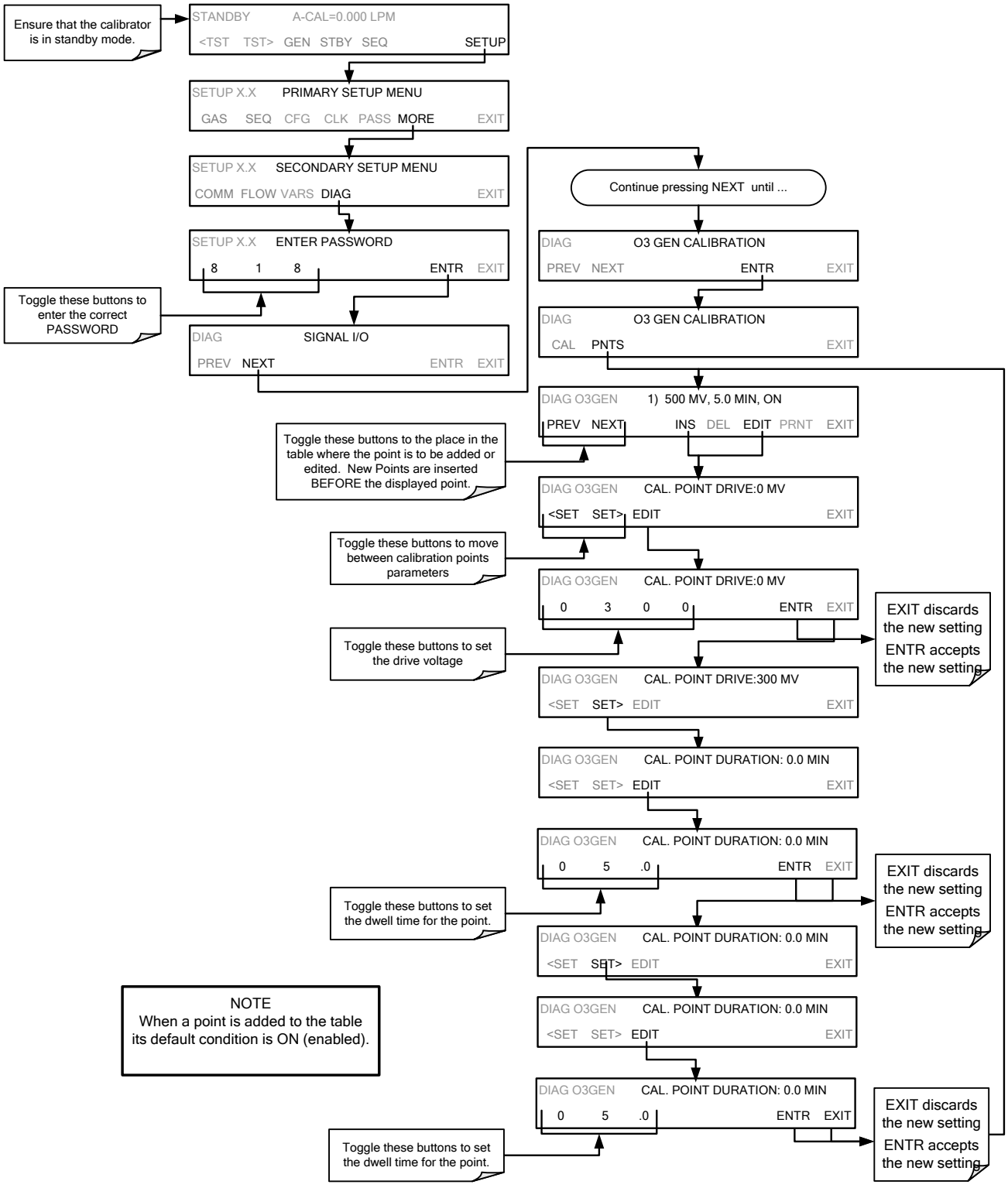

7.3.2.3. Deleting O_3 Generator Calibration Points

To delete an existing calibration point, press:

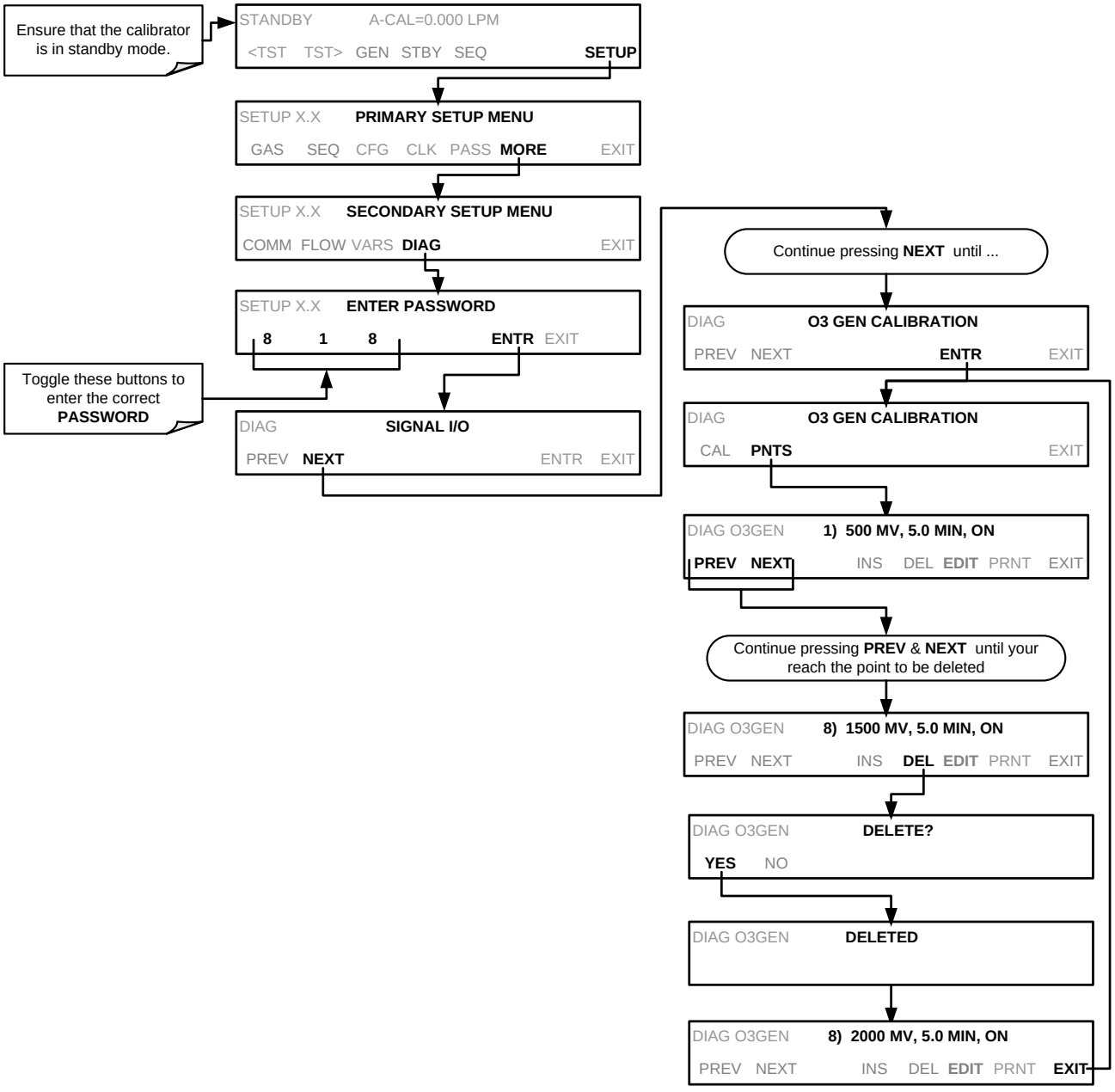

7.3.2.4. Turning O_3 Generator Calibration Points ON / OFF

To enable or disable an existing calibration point, press:

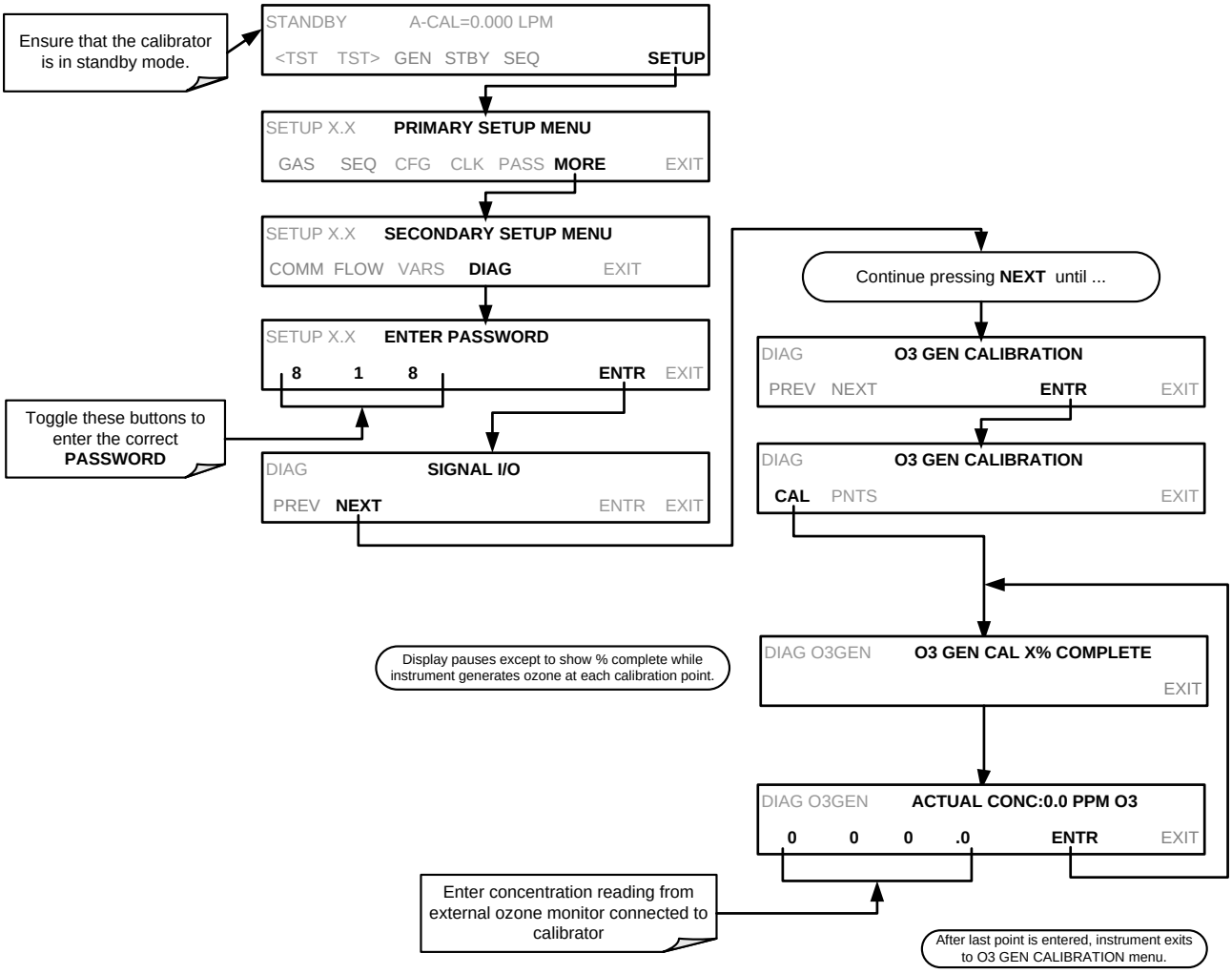

7.3.2.5. Calibrating the O_3 Generator

The ozone generator in the T700H comes calibrated from the factory. If a field re-calibration is required, please contact TAPI Technical Support for details.

7.4. T700H GAS PRESSURE SENSOR CALIBRATION

NOTE

The procedures described in this section require a separate pressure meter/monitor.

The T700H Source Monitoring Dilution Calibrator has several sensors that monitor the pressure of the gases flowing through the instrument. The data collected by these

sensors are used to compensate the final concentration calculations for changes in atmospheric pressure and is stored in the CPU's memory as various test functions:

Table 7-2: T700H Pressure Sensor Calibration Setup

SENSOR	ASSOCIATED TEST FUNCTION	UNITS	PRESSURE MONITOR MEASUREMENT POINT
Diluent Pressure Sensor	**DIL PRESSURE**	**PSIG**	Insert monitor just before the inlet port of the diluent MFC
Cal Gas Pressure Sensor	**CAL PRESSURE**	**PSIG**	Insert monitor just before the inlet port of the cal gas MFC
O_3 Regulator Pressure Sensor	**REG PRESSURE**	**PSIG**	Insert monitor in line between the regulator and the O_3 gas pressure sensor located on the O_3 generator pressure / flow sensor PCA

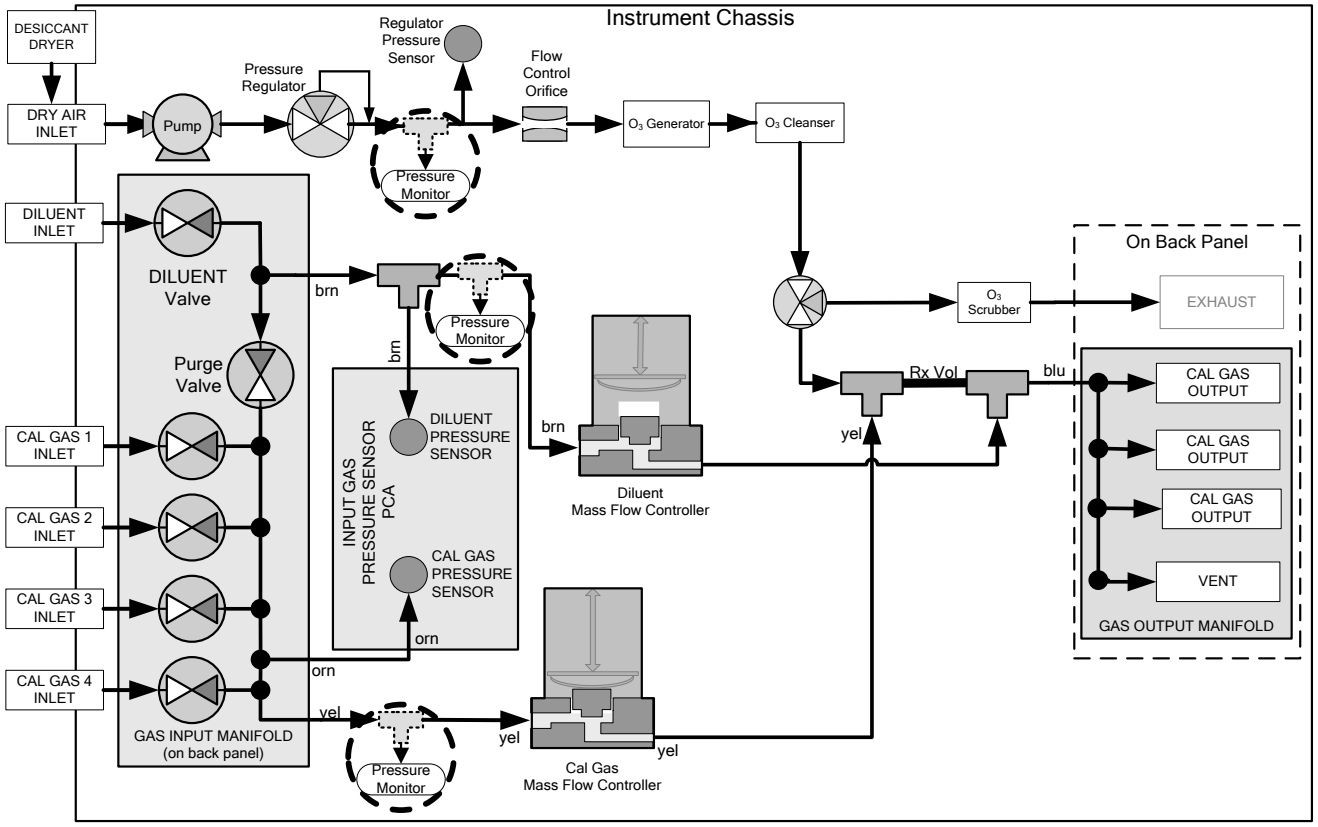

Figure 7-3: Pressure Monitor Points – T700H

7.4.1.1. Calibrating the Diluent, Cal Gas, and O_3 Generator Pressure Sensors

1. Turn off the calibrator and open the top cover.
2. For the sensor being calibrated, insert a "T" pneumatic connector at the location described in Table 7-2 and shown in Figure 7-3.
3. Turn on the calibrator and perform the following steps:

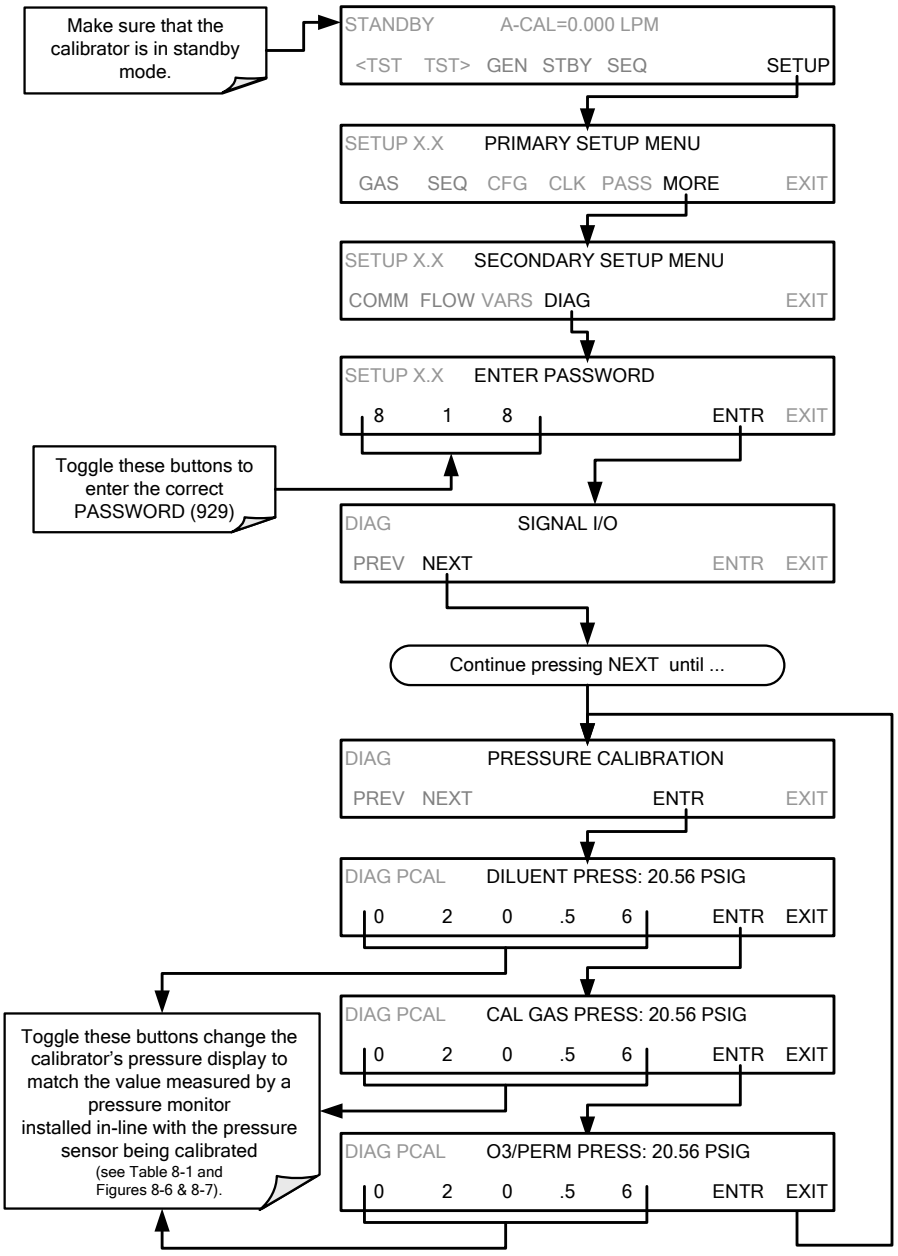

4. Turn OFF the T700H.
5. Remove the pressure monitor.
6. Restore the pneumatic lines to their proper connections.
7. Close the calibrator's cover.

This page intentionally left blank.

PART III
–
TECHNICAL INFORMATION

8. MAINTENANCE SCHEDULE

Predictive diagnostic functions including failure warnings and alarms built into the calibrator's firmware allow the user to determine when repairs are necessary without performing painstaking preventative maintenance procedures.

For the most part the T700H calibrator is maintenance free.

Repairs and troubleshooting are covered in Section 11 of this manual.

8.1. MAINTENANCE SCHEDULE

Table 8-1 shows a typical maintenance schedule for the T700H. Please note that in certain environments (i.e. dusty, very high ambient pollutant levels) some maintenance procedures may need to be performed more often than shown.

WARNING

RISK OF ELECTRICAL SHOCK. DISCONNECT POWER BEFORE PERFORMING ANY OF THE FOLLOWING OPERATIONS THAT REQUIRE ENTRY INTO THE INTERIOR OF THE CALIBRATOR.

CAUTION

THE OPERATIONS OUTLINED IN THIS SECTION ARE TO BE PERFORMED BY QUALIFIED MAINTENANCE PERSONNEL ONLY.

Table 8-1: T700H Maintenance Schedule

Item	Action	Freq	Manual Section	Date Performed									
Test Functions	Verify, record and analyze	Weekly or after any Maintenance or Repair	3.3.4 5.1 Appendix C										
Dryer Dessicant	Replace	Every 30 hours of O_3 Generator run-time*	8.2.1										
Flow Check	Verify Flow of MFCs	Annually or any time the T700H's internal DAC is recalibrated	7.1 & 7.2										
Leak Check	Verify Leak Tight	Annually or after any Maintenance or Repair	8.2.2										
Pneumatic lines	Examine and clean or replace	As needed (requires cal check after cleaning or replacement)	- - -										
*See Table 9-1 for details on the dessicant maintenance warning.													

8.2. MAINTENANCE PROCEDURES

The following procedures are to be performed periodically as part of the standard maintenance of the T700H calibrator.

8.2.1. DRYER DESICCANT

Either replace the desiccant in the dryer mounted on the rear panel, or replace the entire canister if needed. Ensure to dispose of properly, in accordance with local mandates.

8.2.2. LEAK CHECK

The T700H requires a dual-path leak check, using a manual method with low pressure for the Ozone path, and an automatic method with high pressure for the MFC path.

CAUTION – AVOID DAMAGING THE INSTRUMENT:

DO NOT ALLOW HIGH PRESSURE TO RUN THROUGH THE OZONE PATH.

Required Equipment:

- Zero Air (ZA) generator
- Pressure gauge
- ¼" tubing (Teflon)
- ¼" compression fitting
- Tee fitting (brass, stainless steel, Teflon okay)
- Toggle valve
- ¼" caps for four output ports

Setup (please refer to Figure 8-1 through Figure 8-3)**:**

1. Power down the instrument.
2. Connect one side-branch of the tee fitting to the DILUENT IN port.
3. Connect tubing from the ZA generator to the other side-branch of the tee fitting.
4. Connect toggle valve to the middle branch of the tee fitting.
5. Disconnect internal pump from the IN port of the ozone pressure regulator.
6. Connect tubing from the toggle valve to the IN port of the pressure regulator using the ¼" compression fitting.
7. Connect a pressure gauge to the EXHAUST port.

   This completes the setup for leak checking the ozone path. To set up the MFC path:

8. Cap the rear panel output ports.

Figure 8-1: Rear Panel Locations for Pressure Gauge, Tee Fitting, and Caps

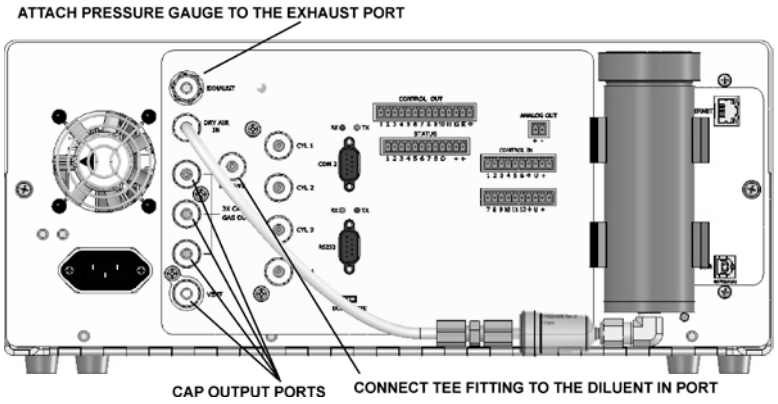

Figure 8-2. Pressure Gauge, Tee Fitting, and Tubing

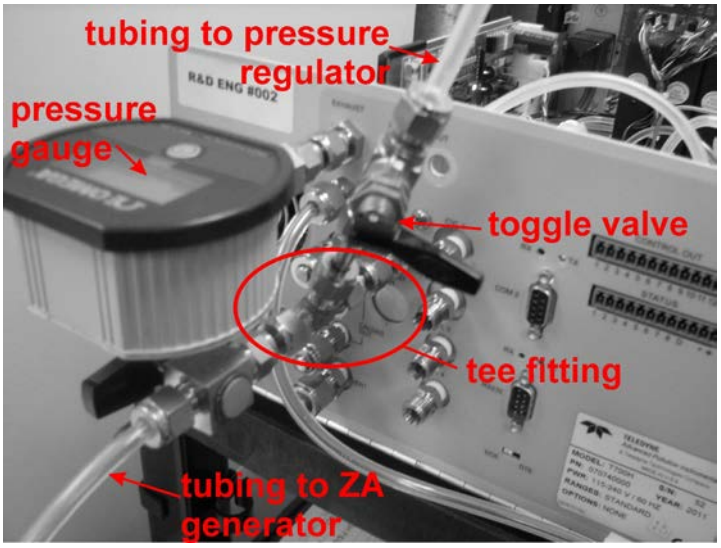

Figure 8-3. Pressure Regulator IN Port.

(Disconnect pump; use ¼" compression fitting at this port to connect tube running from the tee fitting/toggle valve assembly).

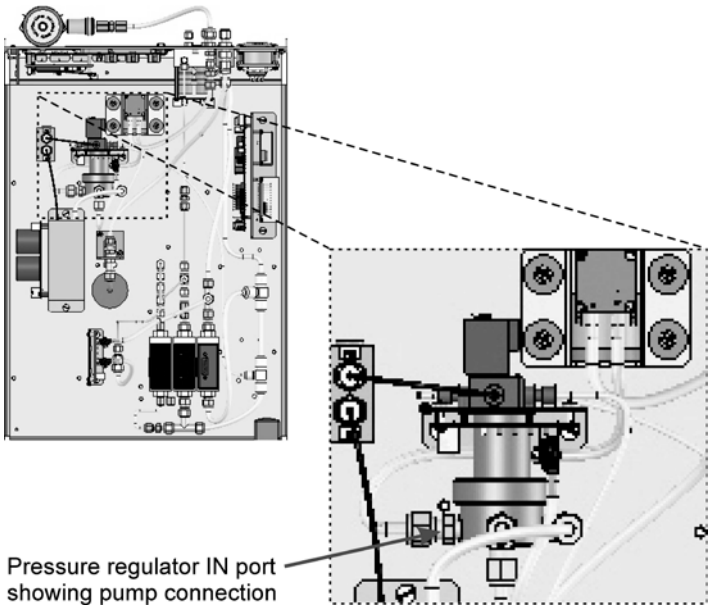

Run leak checks:

1. Ensure the toggle valve is open
2. Power on the instrument and the zero air generator and monitor the pressure gauge at the EXHAUST port to ensure the reading does not exceed 8psi.
3. When the pressure gauge at the EXHAUST port reads 8 psi, close the toggle valve.

   This begins the ozone path leak check, which will take several minutes. In the meantime, start the MFC path automatic leak check through the front panel menu:

4. Press SETUP>MORE>DIAG>929(password)>ENTR>NEXT…NEXT until the display shows AUTO LEAK CHECK.
5. Press ENTR.

This begins the MFC path leak check, which will take a few-to-several minutes. The front panel display reading shows the PSIG value and the % completion until the automatic leak check is complete and the result appears (PASS or FAIL).

Conclusions:

If, after ~10 minutes, the pressure gauge at the EXHAUST port drops below 8 psi (the pressure at which you closed the toggle valve and stopped the zero air flow), there is a leak in the ozone path.

If the Auto Leak Check feature displays a message that the leak check failed, there is a leak in the MFC path.

This page intentionally left blank.

9. GENERAL TROUBLESHOOTING & SERVICE

This section contains a variety of methods for identifying and solving performance problems with the calibrator.

NOTE
The operations outlined in this section must be performed by qualified maintenance personnel only.

WARNING

- Risk of electrical shock. Some operations need to be carried out with the instrument open and running.
- Exercise caution to avoid electrical shocks and electrostatic or mechanical damage to the calibrator.
- Do not drop tools into the calibrator or leave those after your procedures.
- Do not shorten or touch electric connections with metallic tools while operating inside the calibrator.
- Use common sense when operating inside a running calibrator.

9.1. GENERAL TROUBLESHOOTING

The T700H Source Monitoring Dilution Calibrator has been designed so that problems can be rapidly detected, evaluated and repaired. During operation, it continuously performs diagnostic tests and provides the ability to evaluate its operating parameters without disturbing monitoring operations.

A systematic approach to troubleshooting will generally consist of the following five steps:

1. Note any warning messages and take corrective action as necessary.
2. Examine the values of all TEST functions and compare them to factory values. Note any major deviations from the factory values and take corrective action.
3. Use the internal electronic status LEDs to determine whether the electronic communication channels are operating properly.
    - Verify that the DC power supplies are operating properly by checking the voltage test points on the relay PCA.
        - Note that the calibrator's DC power wiring is color-coded and these colors match the color of the corresponding test points on the relay PCA.
4. Follow the procedures defined in Section 3.3.4 to confirm that the calibrator's vital functions are working (power supplies, CPU, relay PCA, etc.).

- See Figure 3-5 for general layout of components and sub-assemblies in the calibrator.
- See the wiring interconnect diagram and interconnect list in Appendix D.

9.1.1. FAULT DIAGNOSIS WITH WARNING MESSAGES

The most common and/or serious instrument failures will result in a warning message being displayed on the front panel. Table 9-1 lists warning messages, along with their meaning and recommended corrective action.

It should be noted that if more than two or three warning messages occur at the same time, it is often an indication that some fundamental sub-system (power supply, relay PCA, motherboard) has failed rather than indication of the specific failures referenced by the warnings. In this case, it is recommended that proper operation of power supplies (See Section 9.4.3), the relay PCA (See Section 9.4.7), and the motherboard (See Section9.4.11) be confirmed before addressing the specific warning messages.

The T700H will alert the user that a Warning Message is active by flashing the FAULT LED, displaying the Warning message in the Param field along with the **CLR** button (press to clear Warning message). The **MSG** button displays if there is more than one warning in queue or if you are in the TEST menu and have not yet cleared the message. The following display/touchscreen examples provide an illustration of each:

Examples: top screen shows FAULT light on with Warning Message in the Param field and CLR button available; bottom screen shows FAULT light still on, but due to being in the TEST menu, a test parameter is displayed until the MSG button is pressed to display the Warning message.

To view or clear the various warning messages press:

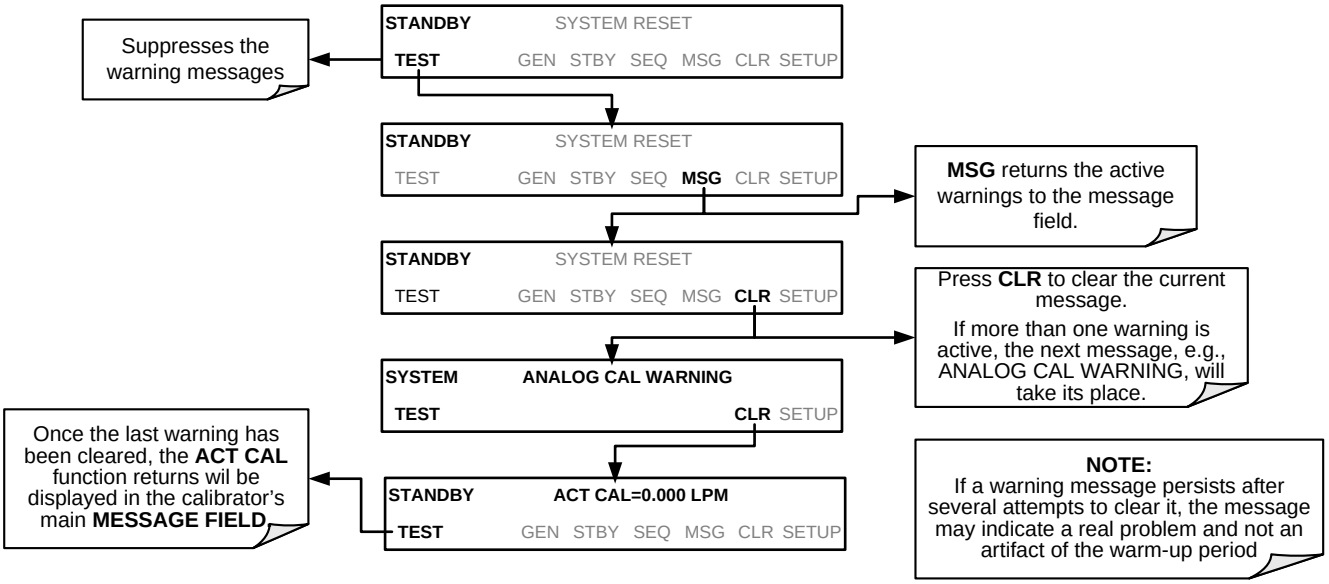

Table 9-1: Warning Messages in Front Panel Display Param Field

WARNING	FAULT CONDITION	POSSIBLE CAUSES
CONFIG INITIALIZED	Configuration and Calibration data reset to original Factory state.	- Failed Disk-on-Module - User has erased configuration data
DATA INITIALIZED	Data Storage in DAS was erased.	- Failed Disk-on-Module. - User cleared data.
MFC PRESSURE WARNING[1]	One of the calibrator's mass flow controllers internal gas pressure is <15 PSIG or > 36 PSIG	- Zero or source air supply is incorrectly set up or improperly vented. - Leak or blockage exists in the T700H's internal pneumatics - Failed CAL GAS or DUILUENT pressure sensor
REAR BOARD NOT DET	Motherboard not detected on power up.	- This WARNING only appears on Serial I/O COMM Port(s) Front Panel Display will be frozen, blank or will not respond. - Failure of Motherboard
REGULATOR PRESSURE WARNING	Regulator pressure is < 15 PSIG or > 25 PSIG.	- Zero or source air supply is incorrectly set up or improperly vented. - Incorrectly adjusted O_3 zero air pressure regulator - Leak or blockage exists in the T700H's internal pneumatics - Failed O_3 Generator Input pressure sensor
RELAY BOARD WARN	The CPU cannot communicate with the Relay PCA.	- I^2C Bus failure - Failed relay PCA - Loose connectors/wiring
SYSTEM RESET	The computer has rebooted.	- This message occurs at power on. - If it is confirmed that power has not been interrupted - Failed +5 VDC power - Fatal error caused software to restart - Loose connector/wiring
VALVE BOARD WARN	The CPU is unable to communicate with the valve board.	- I^2C Bus failure - Failed valve driver PCA - Loose connectors/wiring
DESICCANT WARNING	The dryer desiccant needs to be changed.	- The O_3 Generator has accumulated 30 hours of run-time since the last desiccant change. (After changing dessicant, go to VARS menu and set the DRYER_CLEAR parameter to ON; that resets the timer to 0, and then the system will set the DRYER_CLEAR back to OFF).

[1] On instrument with multiple Cal Gas MFCs installed, the **MFC FLOW WARNING** occurs when the flow rate requested is <10% of the range of the lowest rated MFC (i.e. all of the cal gas MFC are turned off).

9.1.2. FAULT DIAGNOSIS WITH TEST FUNCTIONS

Besides being useful as predictive diagnostic tools, the test functions viewable from the calibrator's front panel can be used to isolate and identify many operational problems when combined with a thorough understanding of the calibrators Theory of Operation (see Section 10).

The acceptable ranges for these test functions are listed in the "Nominal Range" column of the calibrator Final Test and Validation Data Sheet shipped with the instrument. Values outside these acceptable ranges indicate a failure of one or more of the calibrator's subsystems. Functions whose values are still within acceptable ranges but have significantly changed from the measurement recorded on the factory data sheet may also indicate a failure.

A worksheet has been provided in Appendix C to assist in recording the values of these Test Functions.

Table 9-2 contains some of the more common causes for these values to be out of range.

Table 9-2: Test Functions – Indicated Failures

TEST FUNCTION	DIAGNOSTIC RELEVANCE AND CAUSES OF FAULT CONDITIONS.
CAL PRES	Affects proper flow rate of Cal gas MFCs. Possible causes of faults are the same as **MFC PRESSURE WARNING** from Table 9-1.
DIL PRES	Affects proper flow rate of Diluent gas MFCs. Possible causes of faults are the same as **MFC PRESSURE WARNING** from Table 9-1.
REG PRES	Same as **REGULATOR PRESSURE WARNING** from Table 9-1.
BOX TMP	If the Box Temperature is out of range, ensure that the: Box Temperature typically runs ~7°C warmer than ambient temperature. - The Exhaust-Fan is running. - Ensure there is sufficient ventilation area to the side and rear of instrument to allow adequate ventilation.
TIME	Time of Day clock is too fast or slow. ▪ To adjust see Section 5.7. ▪ Battery in clock chip on CPU board may be dead.

9.1.3. USING THE DIAGNOSTIC SIGNAL I/O FUNCTION

The Signal I/O parameters found under the DIAG Menu combined with a thorough understanding of the instruments Theory of Operation (found in Section 10) are useful for troubleshooting in three ways:

- The technician can view the raw, unprocessed signal level of the calibrator's critical inputs and outputs.
- Many of the components and functions that are normally under algorithmic control of the CPU can be manually exercised.
- The technician can directly control the signal level Analog and Digital Output signals.

This allows the technician to observe systematically the effect of directly controlling these signals on the operation of the calibrator. Figure 9-1 is an example of how to use the Signal I/O menu to view the raw voltage of an input signal or to control the state of

an output voltage or control signal. The specific parameter will vary depending on the situation.

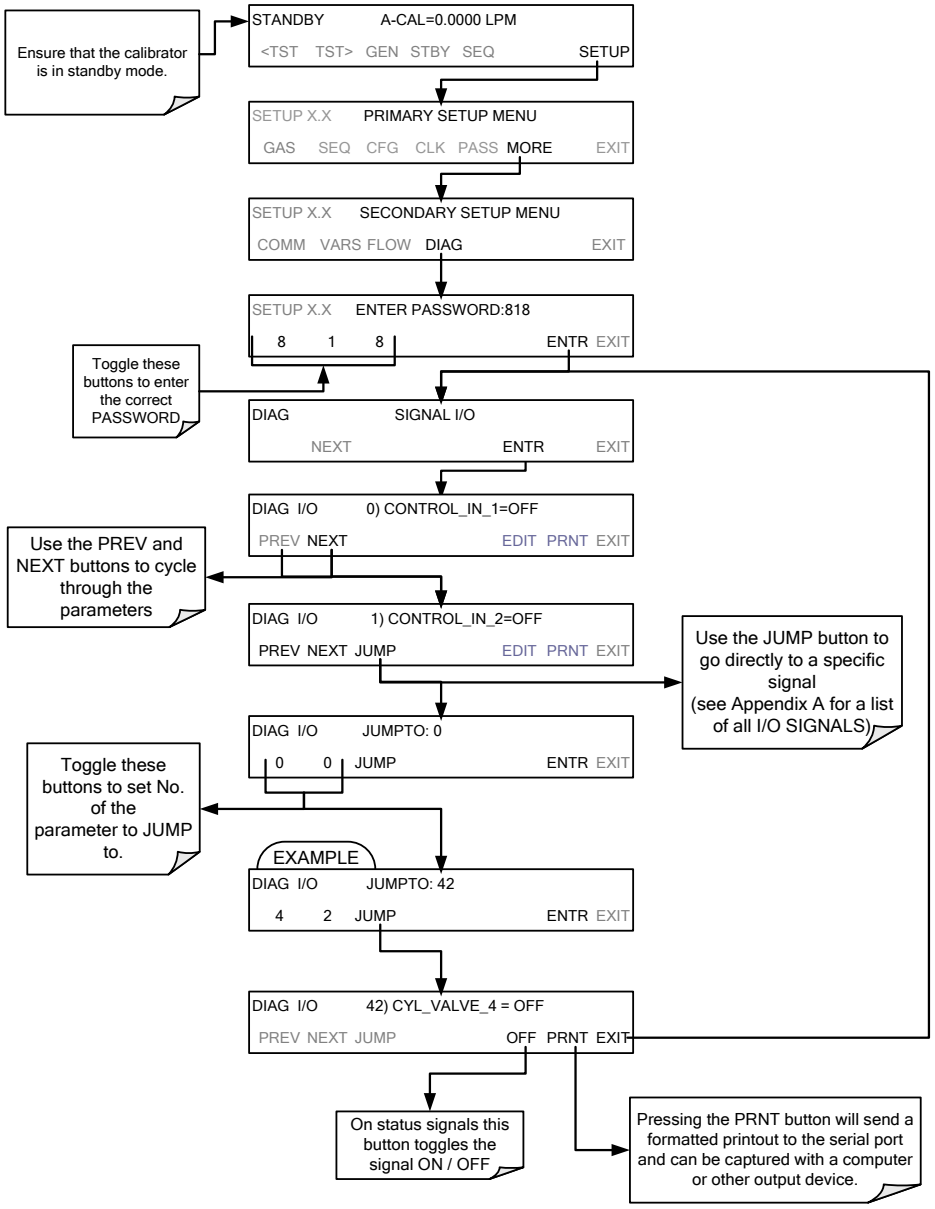

Figure 9-1: Example of Signal I/O Function

9.2. USING THE ANALOG OUTPUT TEST CHANNEL

The signals available for output over the T700H's analog output channel can also be used as diagnostic tools. See Section 5.9 for instruction on activating the analog output and selecting a function.

Table 9-3: Test Channel Outputs as Diagnostic Tools

TEST CHANNEL	DESCRIPTION	ZERO	FULL SCALE	CAUSES OF EXTREMELY HIGH / LOW READINGS
NONE	**TEST CHANNEL IS TURNED OFF**			
CHASSIS TEMP	The temperature inside the T700H's chassis (same as **BOX TEMP**)	0 C°	70 C°	Possible causes of faults are the same as **BOX TEMP** from Table 9-2.

9.3. USING THE INTERNAL ELECTRONIC STATUS LEDS

Several LEDs are located inside the instrument to assist in determining if the calibrators CPU, I^2C bus and Relay PCA are functioning properly.

9.3.1. CPU STATUS INDICATOR

DS5, a red LED, that is located on upper portion of the motherboard, just to the right of the CPU board, flashes when the CPU is running the main program loop. After power-up, approximately 30 – 60 seconds, DS5 should flash on and off. If DS5 does not flash then the program files may have become corrupted; contact Technical Support because it may be possible to recover operation of the calibrator. If after 30 – 60 seconds, DS5 is flashing. then the CPU is bad and must be replaced.

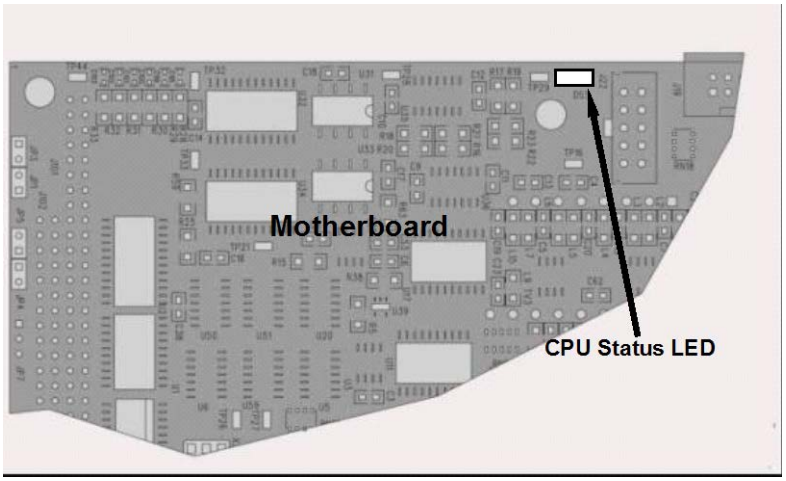

Figure 9-2: CPU Status Indicator

9.3.2. RELAY PCA STATUS LEDS

There are sixteen LEDs located on the Relay PCA. Seven are not used on this model. Refer to Section 10.3.3.2.

9.3.2.1. I^2C Bus Watchdog Status LED

The most important is D1, which indicates the health of the I^2C bus).

Table 9-4: Relay PCA Watchdog LED Failure Indications

LED	Function	Fault Status	Indicated Failure(s)
D1 (Red)	I^2C bus Health (Watchdog Circuit)	Continuously ON or Continuously OFF	Failed/Halted CPU Faulty Mother Board, Valve Driver board or Relay PCA Faulty Connectors/Wiring between Mother Board, Valve Driver board or Relay PCA Failed/Faulty +5 VDC Power Supply (PS1)

If D1 is blinking, then the other LEDs can be used in conjunction with **DIAG** Menu Signal I/O to identify hardware failures of the relays and switches on the Relay.

9.3.2.2. O_3 Valve Status LED

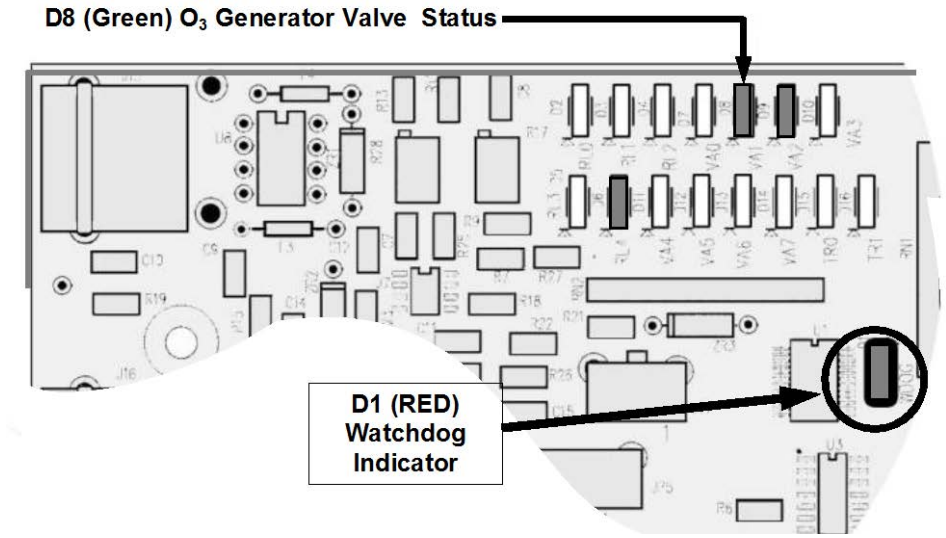

Figure 9-3: Relay PCA LED's Used for Troubleshooting

Table 9-5: Relay PCA Status LED Failure Indications

LED	FUNCTION	SIGNAL I/O PARAMETER	DIAGNOSTIC TECHNIQUE
D8 green	O_3 Generator Valve Status	**O3_GEN_VALVE**	Valve should audibly change states. If not: • Failed Valve • Failed Relay Drive IC on Relay PCA • Failed Relay PCA • Faulty +12 VDC Supply (PS2) • Faulty Connectors/Wiring

9.3.3. VALVE DRIVER PCA STATUS LEDS

The Signal I/O submenu also includes VARS that can be used to turn the various input gas valves on and off as part of a diagnostic investigation.

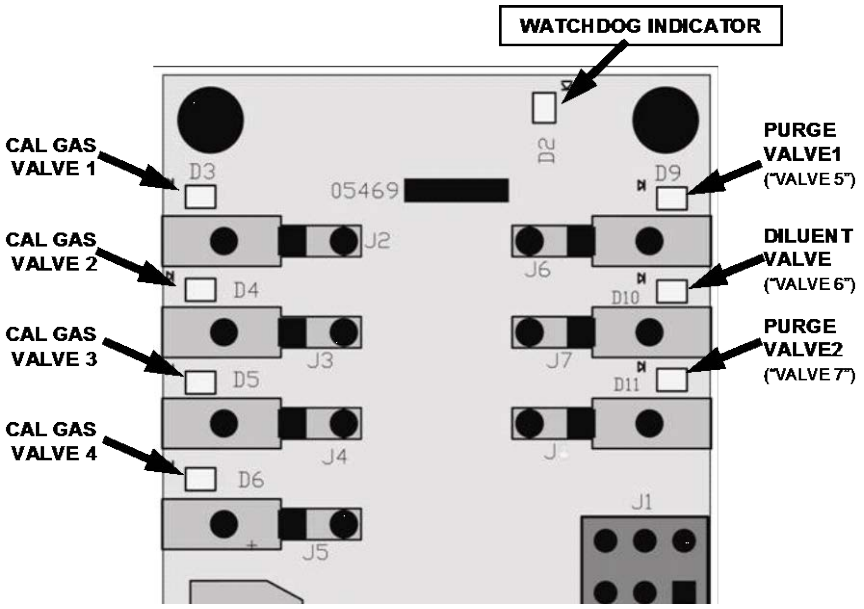

Figure 9-4: Valve Driver PCA Status LEDS Used for Troubleshooting

Table 9-6: Valve Driver Board Watchdog LED Failure Indications

LED	Function	Fault Status	Indicated Failure(s)
D1 (Red)	I^2C bus Health (Watchdog Circuit)	Continuously ON or Continuously OFF	• Failed/Halted CPU • Faulty Mother Board, Valve Driver board or Relay PCA • Faulty Connectors/Wiring between Mother Board, Valve Driver board or Relay PCA • Failed/Faulty +5 VDC Power Supply (PS1)

Table 9-7: Relay PCA Status LED Failure Indications

LED	FUNCTION	ACTIVATED BY SIGNAL I/O PARAMETER	DIAGNOSTIC TECHNIQUE
D3	**Cal Gas CYL1**	**CYL_VALVE_1**	Valve should audibly change states and LED should glow. If not: • Failed Valve • Failed Valve Driver IC on Relay PCA • Failed Valve Driver Board • Faulty +12 VDC Supply (PS2) • Faulty Connectors/Wiring
D4	**Cal Gas CYL2**	**CYL_VALVE_2**	
D5	**Cal Gas CYL3**	**CYL_VALVE_3**	
D6	**Cal Gas CYL4**	**CYL_VALVE_4**	
D9	**Purge Valve 1 Status** ("Valve 5")	**PURGE_VALVE**	
D10	**Diluent Valve Status** ("Valve 6")	**INPUT_VALVE**	
D11	**Purge Valve 2 Status** ("Valve 7")	**PURGE_VALVE2**	

9.4. SUBSYSTEM CHECKOUT

The preceding sections of this manual discussed a variety of methods for identifying possible sources of failures or performance problems within the T700H calibrator. In most cases, this included a list of possible components or subsystems that might be the source of the problem. This section describes how to check individual components or subsystems to determine if which is actually the cause of the problem being investigated.

9.4.1. VERIFY SUBSYSTEM CALIBRATION

A good first step when troubleshooting the operation of the T700H calibrator is to verify that its major subsystems are properly calibrated. These are:

- The mass flow controllers (see Section 7.2).
- Test Channel D → A conversion (see Section 5.9.2).
- Gas pressure calibration (see Section 7.4).
- O_3 generator calibration (see Section 7.3).

9.4.2. AC MAIN POWER

The T700H calibrator's electronic systems will operate with any of the specified power regimes. As long as system is connected to 100-120 VAC or 220-240 VAC at either 50 or 60 Hz it will turn on and after about 30 seconds show a front panel display.

- Internally, the status LEDs located on the Relay PCA, Motherboard and CPU should turn on as soon as the power is supplied.
- If they do not, check the circuit breaker built into the ON/OFF switch on the instruments front panel.

WARNING

SHOULD THE AC POWER CIRCUIT BREAKER TRIP, INVESTIGATE AND CORRECT THE CONDITION CAUSING THIS SITUATION BEFORE TURNING THE CALIBRATOR BACK ON.

9.4.3. DC POWER SUPPLY

If you have determined that the calibrator's AC mains power is working, but the unit is still not operating properly, there may be a problem with one of the instrument's switching power supplies. The supplies can have two faults, namely no DC output, and noisy output.

To assist tracing DC Power Supply problems, the wiring used to connect the various printed circuit assemblies and DC Powered components and the associated test points on the relay PCA follow a standard color-coding scheme as defined in Figure 9-5 and Table 9-8.

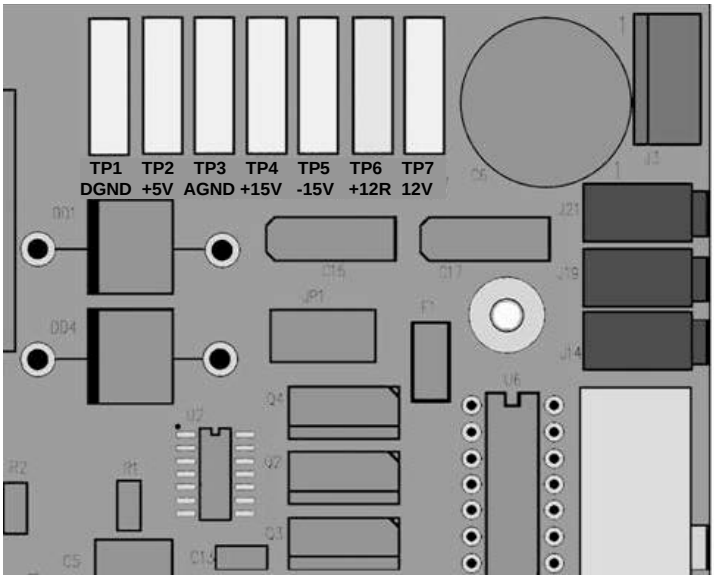

Figure 9-5: Location of DC Power Test Points on Relay PCA

Table 9-8: DC Power Test Point and Wiring Color Codes

NAME	TEST POINT#	TP AND WIRE COLOR
Dgnd	**1**	Black
+5V	**2**	Red
Agnd	**3**	Green
+15V	**4**	Blue
-15V	**5**	Yellow
+12R	**6**	Purple
+12V	**7**	Orange

A voltmeter should be used to verify that the DC voltages are correct per the values in Table 9-9, and an oscilloscope, in AC mode, with band limiting turned on, can be used to evaluate if the supplies are producing excessive noise (> 100 mV p-p).

Table 9-9: DC Power Supply Acceptable Levels

POWER SUPPLY ASSY	VOLTAGE	CHECK RELAY PCA TEST POINTS				MIN V	MAX V
		FROM TEST POINT		TO TEST POINT			
		NAME	#	NAME	#		
PS1	+5	Dgnd	1	+5	2	4.85	5.25
PS1	+15	Agnd	3	+15	4	13.5	16V
PS1	-15	Agnd	3	-15V	5	-14V	-16V
PS1	Agnd	Agnd	3	Dgnd	1	-0.05	0.05
PS1	Chassis	Dgnd	1	Chassis	N/A	-0.05	0.05
PS2	+12	+12V Ret	6	+12V	7	11.75	12.5
PS2	Dgnd	+12V Ret	6	Dgnd	1	-0.05	0.05

9.4.4. I^2C BUS

Operation of the I^2C bus can be verified by observing the behavior of D1 on the relay PCA & D2 on the Valve Driver PCA. Assuming that the DC power supplies are operating properly, the I^2C bus is operating properly if D1 on the relay PCA and D2 of the Valve Driver PCA are flashing

There is a problem with the I^2C bus if both D1 on the relay PCA and D2 of the Valve Driver PCA are ON/OFF constantly.

9.4.5. TOUCHSCREEN INTERFACE

Verify the functioning of the touch screen by observing the display when pressing a touch-screen control button. Assuming that there are no wiring problems and that the DC power supplies are operating properly, but pressing a control button on the touch screen does not change the display, any of the following may be the problem:

- The touch-screen controller may be malfunctioning.
- The internal USB bus may be malfunctioning.

You can verify this failure by logging on to the instrument using APICOM or a terminal program. If the analyzer responds to remote commands and the display changes accordingly, the touch-screen interface may be faulty.

9.4.6. LCD DISPLAY MODULE

Verify the functioning of the front panel display by observing it when power is applied to the instrument. Assuming that there are no wiring problems and that the DC power supplies are operating properly, the display screen should light and show the splash screen and other indications of its state as the CPU goes through its initialization process.

9.4.7. RELAY PCA

The Relay PCA can be most easily checked by observing the condition of the status LEDs on the Relay PCA (see Section 9.3.2), and using the **SIGNAL I/O** submenu under the **DIAG** menu (see Section 9.1.3) to turn each LED **ON** or **OFF.**

If D1 on the Relay PCA is flashing and the status indicator for the output in question (Valve Drive, etc.) turns on and off properly using the Signal I/O function, then the associated control device on the Relay PCA is bad. Several of the control devices are in sockets and can be easily replaced. Table 9-10 lists the control device associated with a particular function.

Table 9-10: Relay PCA Control Devices

FUNCTION	CONTROL DEVICE	IN SOCKET
O_3 Pump	Q3	Yes
All Valves	U5	Yes

9.4.8. VALVE DRIVER PCA

Like the Relay PCA the valve driver PCA is checked by observing the condition of the its status LEDs on the Relay Board (see Section 9.3.2), and using the **SIGNAL I/O** submenu under the **DIAG** menu (see Section 9.1.3) to toggle each LED **ON** or **OFF.**

If D2 on the valve driver board is flashing and the status indicator for the output in question (Gas Cyl 1, Purge Valve, etc.) toggles properly using the Signal I/O function, then the control IC is bad.

9.4.9. INPUT GAS PRESSURE ASSEMBLY

The input gas pressure PCA, located at the front of the instrument to the left of the MFCs (see Figure 3-5) can be checked with a Voltmeter. The following procedure assumes that the wiring is intact and that the motherboard as well as the power supplies is operating properly:

BASIC PCA OPERATION:

- Measure the voltage across C1 it should be 5 VDC ± 0.25 VDC. If not then the board is bad

CAL GAS PRESSURE SENSOR:

1. Measure the pressure on the inlet side of S1 with an external pressure meter.
2. Measure the voltage across TP4 and TP1.

- The expected value for this signal should be:

$$\text{Expected mVDC} = \left(\frac{\text{Pressure}}{34.18_{psig}} \times 4250_{mvDC}\right) + 750_{mvDC} \quad \pm 10\%_{rdg}$$

EXAMPLE: If the measured pressure is 25 PSIG, the expected voltage level between TP4 and TP1 would be between 3470 mVDC and 4245 mVDC.

EXAMPLE: If the measured pressure is 30 PSIG, the expected voltage level between TP4 and TP1 would be between 4030 mVDC and 4930 mVDC.

- If this voltage is out of range, then either pressure transducer S1 is bad, the board is bad, or there is a pneumatic failure preventing the pressure transducer from sensing the pressure properly.

DILUENT PRESSURE SENSOR:

1. Measure the pressure on the inlet side of S2 with an external pressure meter.
2. Measure the voltage across TP5 and TP1.
   - Evaluate the reading in the same manner as for the cal gas pressure sensor.

9.4.10. O_3 GENERATOR PRESSURE ASSEMBLY

The pressure PCA, located at the rear of the instrument can be checked with a Voltmeter. The following procedure assumes that the wiring is intact and that the motherboard as well as the power supplies are operating properly:

BASIC PCA OPERATION

- Measure the voltage across C1 it should be 5 VDC ± 0.25 VDC. If not then the board is bad
- Measure the voltage between TP2 and TP1 C1 it should be 1o VDC ± 0.25 VDC. If not then the board is bad.

O_3 FLOW ORIFICE PRESSURE SENSOR

1. Measure the pressure on the inlet side of S2 with an external pressure meter.
2. Measure the voltage across TP5 and TP1.
   - Evaluate the reading in the same manner as for the cal gas pressure sensor (see Section 9.4.9).

9.4.11. MOTHERBOARD

9.4.11.1. A/D Functions

The simplest method to check the operation of the A-to-D converter on the motherboard is to use the Signal I/O function under the DIAG menu to check the two A/D reference voltages and input signals that can be easily measured with a voltmeter.

1. Use the Signal I/O function (See Section 9.1.3 and Appendix A) to view the value of **REF_4096_MV** and **REF_GND**. If both are within 3 mV of nominal (4096 and 0), and are stable, ±0.5 mV then the basic A/D is functioning properly. If not then the motherboard is bad.
2. Choose a parameter in the Signal I/O function such as **DIL_PRESS, MFC_FLOW_1** or **REG_PRESS**.
   - Compare these voltages at their origin (see the interconnect drawing and interconnect list in Appendix D) with the voltage displayed through the signal I/O function.
   - If the wiring is intact but there is a large difference between the measured and displayed voltage (±10 mV) then the motherboard is bad.

9.4.11.2. Test Channel / Analog Outputs Voltage

To verify that the analog output is working properly, connect a voltmeter to the output in question and perform an analog output step test as follows:

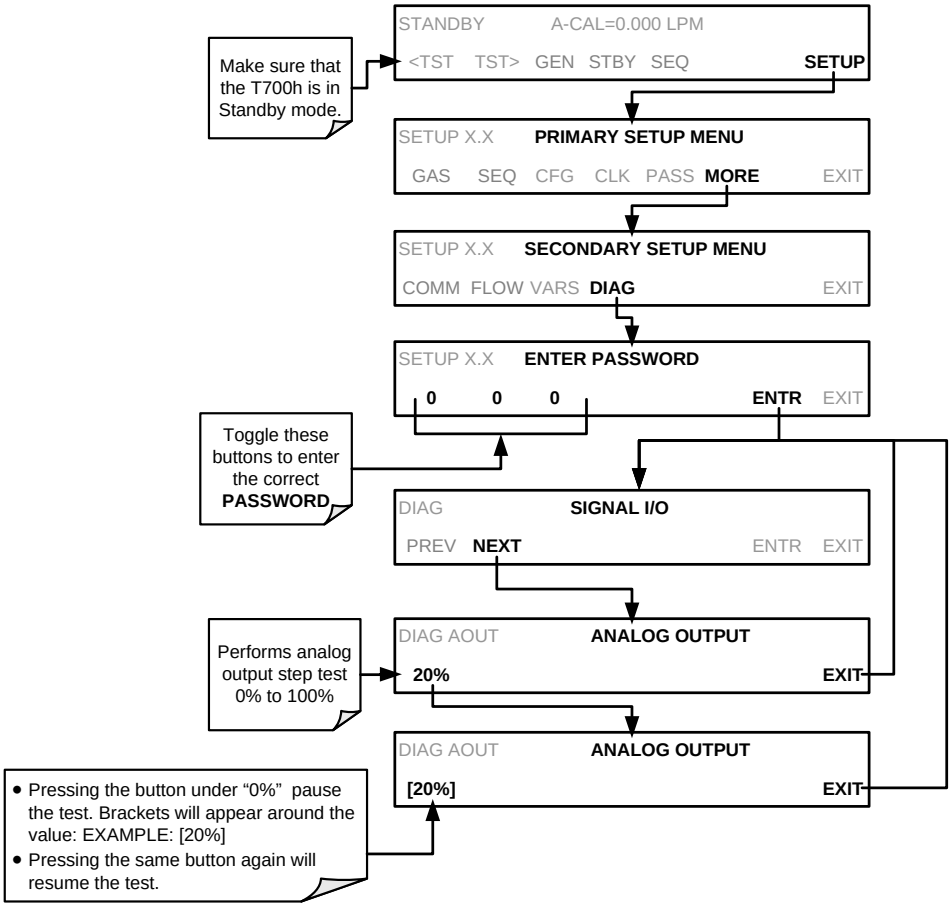

For each of the steps the output should be within 1% of the nominal value listed in the table below except for the 0% step, which should be within 0mV ±2 to 3 mV. Ensure you take into account any offset that may have been programmed into channel (See Section 5.9.1.5).

Table 9-11: Analog Output Test Function – Nominal Values Voltage Outputs

		FULL SCALE OUTPUT OF VOLTAGE RANGE(see Section 5.9.1.3)			
		100MV	1V	5V	10V
STEP	%	NOMINAL OUTPUT VOLTAGE			
1	0	0	0	0	0
2	20	20 mV	0.2	1	2
3	40	40 mV	0.4	2	4
4	60	60 mV	0.6	3	6
5	80	80 mV	0.8	4	8
6	100	100 mV	1.0	5	10

If one or more of the steps fails to be within these ranges, it is likely that there has been a failure of the either or both of the DACs and their associated circuitry on the motherboard.

9.4.11.3. Status Outputs

To test the status output electronics:

1. Connect a jumper between the "D" pin and the "▽" pin on the status output connector.
2. Connect a 1000 ohm resistor between the "+" pin and the pin for the status output that is being tested.
3. Connect a voltmeter between the "▽" pin and the pin of the output being tested (see table below).
4. Under the **DIAG→ SIGNAL I/O** menu (See Section9.1.3), scroll through the inputs and outputs until you get to the output in question.
5. Alternately, turn on and off the output noting the voltage on the voltmeter.
   - It should vary between 0 volts for ON and 5 volts for OFF.

Table 9-12: Status Outputs Check

PIN (LEFT TO RIGHT)	STATUS
1	ST_SYSTEM_OK
2	SPARE
3	ST_CAL_ACTIVE
4	ST_DIAG_MODE
5	ST_TEMP_ALARM
6	ST_PRESS_ALARM
7	PERM_VALVE_1
8	PERM_VALVE_2

9.4.11.4. Control Inputs

Table 9-13: T700H Control Input Pin Assignments and Corresponding Signal I/O Functions

CONNECTOR	INPUT	CORRESPONDING I/O SIGNAL
Top	**A**	**CONTROL_IN_1**
Top	**B**	**CONTROL_IN_2**
Top	**C**	**CONTROL_IN_3**
Top	**D**	**CONTROL_IN_4**
Top	**E**	**CONTROL_IN_5**
Top	**F**	**CONTROL_IN_6**
Bottom	**G**	**CONTROL_IN_7**
Bottom	**H**	**CONTROL_IN_8**
Bottom	**I**	**CONTROL_IN_9**
Bottom	**J**	**CONTROL_IN_10**
Bottom	**K**	**CONTROL_IN_11**
Bottom	**L**	**CONTROL_IN_12**

The control input bits can be tested by applying a trigger voltage to an input and watching changes in the status of the associated function under the SIGNAL I/O submenu:

EXAMPLE: to test the "**A**" control input:

1. Under the **DIAG→ SIGNAL I/O** menu (See Section 9.1.3), scroll through the inputs and outputs until you get to the output named **0) CONTROL_IN_1**.
2. Connect a jumper from the "**+**" pin on the appropriate connector to the "**U**" on the same connector.
3. Connect a second jumper from the "▽" pin on the connector to the "**A**" pin.
4. The status of **0) CONTROL_IN_1** should change to read "**ON**".

9.4.11.5. Control Outputs

To test the Control Output electronics:

1. Connect a jumper between the "E" pin and the "▽" pin on the status output connector.
2. Connect a 1000 ohm resistor between the "+" pin and the pin for the status output that is being tested.
3. Connect a voltmeter between the "▽" pin and the pin of the output being tested (see Table 9-14).
4. Under the **DIAG→ SIGNAL I/O** menu (See Section 9.1.3), scroll through the inputs and outputs until you get to the output in question.
5. Alternately, turn on and off the output noting the voltage on the voltmeter.
   - It should vary between 0 volts for ON and 5 volts for OFF.

Table 9-14: Control Outputs Pin Assignments and Corresponding Signal I/O Functions Check

PIN (LEFT TO RIGHT)	STATUS
1	**CONTROL_OUT_1**
2	**CONTROL_OUT_2**
3	**CONTROL_OUT_3**
4	**CONTROL_OUT_4**
5	**CONTROL_OUT_5**
6	**CONTROL_OUT_6**
7	**CONTROL_OUT_7**
8	**CONTROL_OUT_8**
9	**CONTROL_OUT_9**
10	**CONTROL_OUT_10**
11	**CONTROL_OUT_11**
12	**CONTROL_OUT_12**

9.4.12. CPU

There are two major types of CPU board failures, a complete failure and a failure associated with the Disk On Module (DOM). If either of these failures occurs, contact the factory.

For complete failures, assuming that the power supplies are operating properly and the wiring is intact, the CPU is faulty if on power-on, the watchdog LED on the motherboard is not flashing.

In some rare circumstances, this failure may be caused by a bad IC on the motherboard, specifically U57, the large, 44 pin device on the lower right hand side of the board. If this is true, removing U57 from its socket will allow the instrument to start up but the measurements will be invalid.

If the analyzer stops during initialization (the front panel display shows a fault or warning message), it is likely that the DOM, the firmware or the configuration and data files have been corrupted.

9.4.13. THE CALIBRATOR DOESN'T APPEAR ON THE LAN OR INTERNET

Most problems related to Internet communications via the Ethernet card will be due to problems external to the calibrator (e.g. bad network wiring or connections, failed routers, malfunctioning servers, etc.) However, there are several symptoms that indicate the problem may be with the Ethernet card itself.

If neither of the Ethernet cable's two status LED's (located on the back of the cable connector) is lit while the instrument is connected to a network:

- Verify that the instrument is being connected to an active network jack.
- Check the internal cable connection between the Ethernet card and the CPU board.

9.4.14. RS-232 COMMUNICATIONS

9.4.14.1. General RS-232 Troubleshooting

TAPI calibrators use the RS-232 communications protocol to allow the instrument to be connected to a variety of computer-based equipment. RS-232 has been used for many years and as equipment has become more advanced, connections between various types of hardware have become increasingly difficult. Generally, every manufacturer observes the signal and timing requirements of the protocol very carefully.

Problems with RS-232 connections usually center around 4 general areas:

- Incorrect cabling and connectors. See Section 6.1.2 for connector and pin-out information.
- The BAUD rate and protocol are incorrectly configured. See Section 6.1.3.
- If a modem is being used, additional configuration and wiring rules must be observed. See Section 6.2.
- Incorrect setting of the DTE-DCE Switch is set correctly. See Section 6.1.1.
- Verify that the cable (P/N 03596) that connects the serial COMM ports of the CPU to J12 of the motherboard is properly seated.

9.4.14.2. Troubleshooting Calibrator/Modem or Terminal Operation

These are the general steps for troubleshooting problems with a modem connected to a TAPI calibrator.

1. Check cables for proper connection to the modem, terminal or computer.
2. Check to ensure the DTE-DCE is in the correct position as described in Section 6.1.1.
3. Check to ensure the set up command is correct. See Section 6.2.1.
4. Verify that the Ready to Send (RTS) signal is at logic high. The T700H sets pin 7 (RTS) to greater than 3 volts to enable modem transmission.
5. Ensure the BAUD rate, word length, and stop bit settings between modem and calibrator match. See Section 6.1.3.
6. Use the RS-232 test function to send “w” characters to the modem, terminal or computer. See Section 6.1.5.
7. Get your terminal, modem or computer to transmit data to the calibrator (holding down the space bar is one way); the green RX LED should flicker as the instrument is receiving data.
8. Ensure that the communications software or terminal emulation software is functioning properly.

NOTE

Further help with serial communications is available in a separate manual “RS-232 Programming Notes” TAPI’s P/N 013500000.

9.4.15. BOX / CHASSIS TEMPERATURE

The box temperature sensor is mounted to the Motherboard and cannot be disconnected to check its resistance. Rather check the **BOX TEMP** signal using the **SIGNAL I/O** function under the **DIAG** Menu (see Section 9.1.3). This parameter will vary with ambient temperature, but at ~30°C (6-7° above room temperature) the signal should be ~1450 mV.

9.5. SERVICE PROCEDURES

9.5.1. DISK-ON-MODULE REPLACEMENT PROCEDURE

Replacing the Disk-on-Module (DOM) will cause loss of all DAS data; it may also cause some of the instrument configuration parameters to be lost unless the replacement DOM carries the exact same firmware version. Whenever changing the version of installed software, the memory must be reset. Failure to ensure that memory is reset can cause the analyzer to malfunction, and invalidate measurements. After the memory is reset, the A/D converter must be re-calibrated, and all information collected in Step 1 below must be re-entered before the instrument will function correctly. Also, zero and span calibration should be performed.

1. Document all analyzer parameters that may have been changed, such as range, auto-cal, analog output, serial port and other settings before replacing the DOM
2. Turn off power to the instrument, fold down the rear panel by loosening the mounting screws.
3. When looking at the electronic circuits from the back of the analyzer, locate the Disk-on-Module in the right-most socket of the CPU board.
4. The DOM should carry a label with firmware revision, date and initials of the programmer.
5. Remove the nylon standoff clip that mounts the DOM over the CPU board, and lift the DOM off the CPU. Do not bend the connector pins.
6. Install the new Disk-on-Module, making sure the notch at the end of the chip matches the notch in the socket.
7. It may be necessary to straighten the pins somewhat to fit them into the socket. Press the DOM all the way in and reinsert the offset clip.
8. Close the rear panel and turn on power to the machine.
9. If the replacement DOM carries a firmware revision, re-enter all of the setup information.

9.6. TECHNICAL ASSISTANCE

If this manual and its troubleshooting & repair sections do not solve your problems, technical assistance may be obtained from:

TAPI TECHNICAL SUPPORT
9970 CARROLL CANYON ROAD
SAN DIEGO, CALIFORNIA 92131-1106
USA

Toll-free Phone:	**800-324-5190**
Phone:	**+1 858-657-9800**
Fax:	**+1 858-657-9816**
Email:	**sda_techsupport@teledyne.com**
Website:	**http://www.teledyne-api.com/**

Before you contact Technical Support, fill out the problem report form in Appendix C, which is also available online for electronic submission at http://www.teledyne-api.com/forms/.

10. PRINCIPLES OF OPERATION

10.1. BASIC PRINCIPLES OF SOURCE MONITORING DILUTION CALIBRATION

The T700H Source Monitoring Dilution Calibrator generates calibration gas mixtures by mixing bottled source gases of known concentrations with a diluent gas. Using several Mass Flow Controllers (MFCs) the T700H calibrator creates exact ratios of diluent and source gas by controlling the relative rates of flow of the various gases, under conditions where the temperature and pressure of the gases being mixed is known (and therefore the density of the gases).

The CPU calculates both the required source gas and diluent gas flow rates and controls the corresponding mass flow controllers by the following equation.

Equation 9-1

$$C_f = C_i \times \frac{GAS_{flow}}{Totalflow}$$

WHERE:

C_f = final concentration of diluted gas

C_i = source gas concentration

GAS_{flow} = source gas flow rate

Totalflow = the total gas flow through the calibrator

Totalflow is determined as:

Equation 9-2a

$$\boldsymbol{TOTALFLOW} = GAS_{flow} + Diluent_{flow}$$

WHERE:

GAS_{flow} = source gas flow rate

$Diluent_{flow}$ = diluent gas flow rate

For instrument with multiple source gas MFC total Flow is:

Equation 9-2b

$$\boldsymbol{TOTALFLOW} = GAS_{flow\ MFC1} + GAS_{flow\ MFC2} + GAS_{flow\ MFC3} + Diluent_{flow\ rate}$$

The T700H calibrator's level of control is so precise that bottles of mixed gases can be used as source gas. Once the exact concentrations of all of the gases in the bottle are programmed into the T700H, it will create an exact output concentration of any of the gases in the bottle.

10.1.1. GAS PHASE TITRATION MIXTURES FOR O_3 AND NO

Because ozone is a very reactive and therefore under normal ambient conditions a short-lived gas, it cannot be reliably bottled, however, an optional O_3 generator can be included in the T700H calibrator that allows the instrument to be used to create calibration mixtures that include O_3.

This ability to generate O_3 internally also allows the T700H Source Monitoring Dilution Calibrator to be used to create calibration mixture containing NO_2 using a gas phase titration process (GPT) by precisely mixing bottled NO of a known concentration with O_3 of a known concentration and diluent gas (nitrogen).

The principle of GPT is based on the rapid gas phase reaction between NO and O_3 that produces quantities of NO_2 as according to the following equation:

Equation 9-3

$$NO + O_3 \longrightarrow NO_2 + O_2 + h\nu_{(light)}$$

Under controlled circumstances, the NO-O_3 reaction is very efficient (<1% residual O_3), therefore the concentration of NO_2 resulting from the mixing of NO and O_3 can be accurately predicted and controlled as long as the following conditions are met:

d) The amount of O_3 used in the mixture is known.
e) The amount of NO used in the mixture is **AT LEAST** 10% greater than the amount O_3 in the mixture.
f) The volume of the mixing chamber is known.
g) The NO and O_3 flow rates (from which the time the two gases are in the mixing chamber) are low enough to give a residence time of the reactants in the mixing chamber of >2.75 ppm min.

Given the above conditions, the amount of NO_2 being output by the T700H will be equal to (at a 1:1 ratio) the amount of O_3 added.

Since:

- The O_3 flow rate of the T700H's O_3 generator is a fixed value (typically about 0.105 LPM);
- The GPT chamber's volume is known,
- The source concentration of NO is a fixed value,

Once the **TOTALFLOW** is determined and entered into the T700H's memory and target concentration for the O_3 generator are entered into the calibrator's software, the T700H adjusts the NO flow rate and diluent (nitrogen) flow rate to precisely create the appropriate NO_2 concentration at the output.

In this case, ***Totalflow*** is calculated as:

Equation 9-4

$$DIL_{flow} = Totalflow - NO\,GAS_{flow} - O_{3\,flow}$$

WHERE:

$NOGAS_{flow}$ = NO source gas flow rate (For calibrator's with multiple source gas MFC, $NOGAS_{flow}$ is the sum of the flow rate for all of the active cal gas MFCs)

Totalflow = total gas flow requirements of the system.

$O_{3\,flow}$ = the flow rate set for the O_3 generator.

DIL_{flow} = required diluent gas flow

10.2. PNEUMATIC OPERATION

The T700H calibrator pneumatic system consists of the precision dilution system and valve manifold consisting of four gas port valves and one diluent air valve. When bottles of source gas containing different, gases are connected to the four source-gas inlet-ports, these valves are used to select the gas type to be used by opening and closing off gas flow from the various bottles upstream of the MFCs.

NOTE

Each input valve is rated for up to 40 PSI pressure and the source gas pressure should be between 25 to 30 PSI and never more than 35 PSI. Exceeding 35 PSI may cause leakage that could cause unwanted gases to be included in the calibration mixture.

By closing all of the four source gas input valves so that only diluent gas is allowed into the calibrator, the entire pneumatic system can be purged with diluent.

See Figure 3-6 for descriptions of the internal pneumatics for the T700H calibrator.

10.2.1. GAS FLOW CONTROL

The precision of gas flow through the T700H Source Monitoring Dilution Calibrator is centrally critical to its ability to mix calibration gases accurately. This control is established in several ways.

10.2.1.1. Diluent and Source Gas Flow Control

Nitrogen is the preferred diluent gas for the T700H; however, zero air can be used for diluent only when the GPT function is not being utilized. Diluent and source gas flow in the T700H calibrator is directly controlled by using highly accurate Mass Flow Controllers. The MFCs consist of a shunt, a sensor, a solenoid valve and the electronic circuitry required to operate them.

The shunt divides the gas flow such that the flow through the sensor is a precise percentage of the flow through the valve. The flow through the sensor is always laminar.

The MFC's internal sensor operates on a unique thermal-electric principle. A metallic capillary tube is heated uniformly by a resistance winding attached to the midpoint of the capillary. Thermocouples are welded at equal distances from the midpoint of the tube. At zero air flow the temperature of both thermocouples will be the same. When flow occurs through the tubing, heat is transferred from the tube to the gas on the inlet side and from the gas back to the tube on the outlet side creating an asymmetrical temperature distribution. The thermocouples sense this decrease and increase of temperature in the capillary tube and produce a mVDC output signal proportional to that change that is proportional to the rate of flow through the MFC valve.

The electronic circuitry reads the signal output by the thermal flow sensor measured through a capillary tube. This signal is amplified so that it is varies between 0.00 VDC and 5.00 VDC. A separate 0 to 5 VDC command voltage is also generated and is proportional to the target flow rate requested by the T700H's CPU. The 0-5VDC command signal is electronically subtracted from the 0-5VDC flow signal. The amount

and direction of the movement is dependent upon the value and the sign of the differential signal.

The MFC's valve is an automatic metering solenoid type; its height off the seat is controlled by the voltage in its coil. The controller's circuitry amplifies and the differential signal obtained by comparing the control voltage to the flow sensor output and uses it to drive the solenoid valve.

This process is heavily dependent on the capacity of the gas to heat and cool. Since the heat capacity of many gases is relatively constant over wide ranges of temperature and pressure, the flow meter is calibrated directly in molar mass units for known gases (see Section 3.3.7.3). Changes in gas composition usually only require application of a simple multiplier to the air calibration to account for the difference in heat capacity and thus the flow meter is capable of measuring a wide variety of gases.

10.2.1.2. Flow Control Assembly for O_3 Generator

Whereas the gas flow rates for the diluent air and external gas sources are controlled directly by the calibrator's MFC's, the O3 generator gas flow is set by an orifice flow control assembly. This orifice is not adjustable. Flow stability is maintained by the use of a precision pressure regulator that controls the pressure upstream of the orifice.

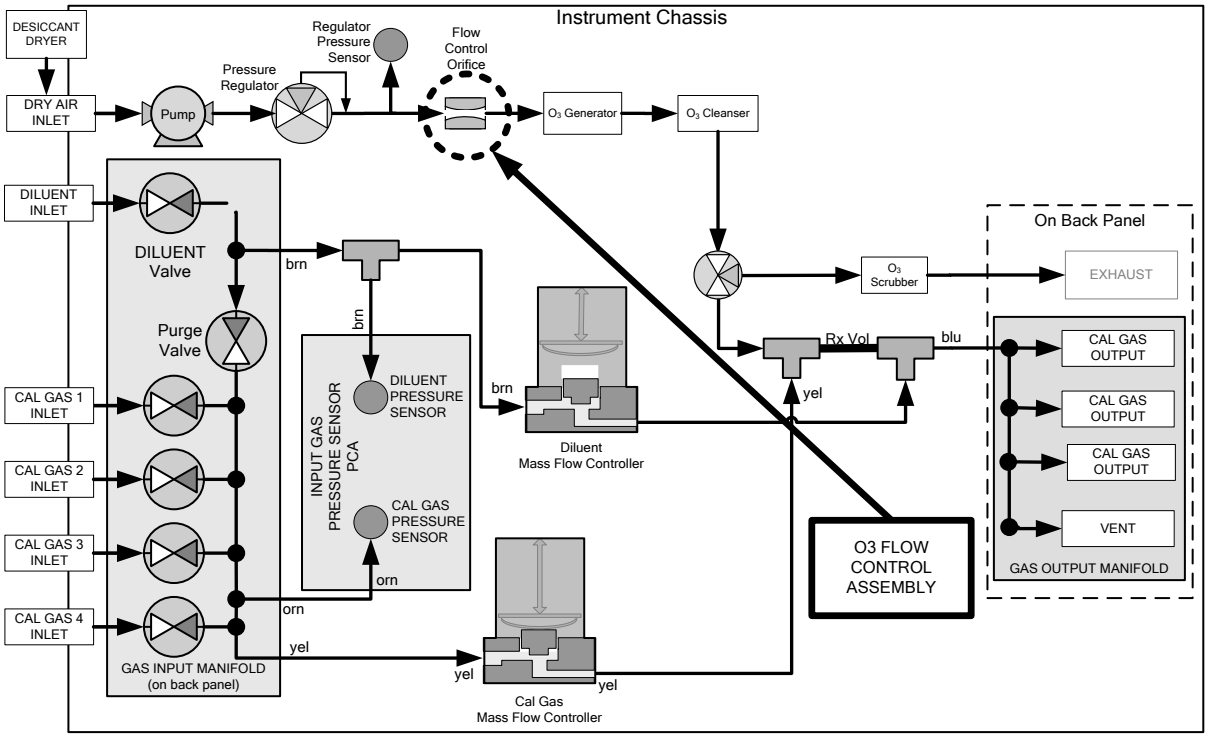

Figure 10-1: Location of Gas Flow Control Assembly

The flow orifice assemblies consist of:

- A critical flow orifice.
- Two o-rings: Located just before and after the critical flow orifice, the o-rings seal the gap between the walls of assembly housing and the critical flow orifice.
- A sintered filter to trap any debris from clogging the critical flow orifice
- A spring: Applies mechanical force needed to form the seal between the o-rings, the filter, the critical flow orifice and the assembly housing.

10.2.1.3. Critical Flow Orifice

The most important component of the flow control assembly is the critical flow orifice.

Critical flow orifices are a remarkably simple way to regulate stable gas flow rates. They operate without moving parts by taking advantage of the laws of fluid dynamics. By restricting the flow of gas though the orifice, a pressure differential is created.

When the ratio of upstream pressure to downstream pressure is greater than 2:1, the velocity of the gas through the orifice reaches the speed of sound. As long as that ratio stays at least 2:1 the gas flow rate is unaffected by any fluctuations, surges, or changes in downstream pressure because such variations only travel at the speed of sound themselves and are therefore cancelled out by the sonic shockwave at the downstream exit of the critical flow orifice.

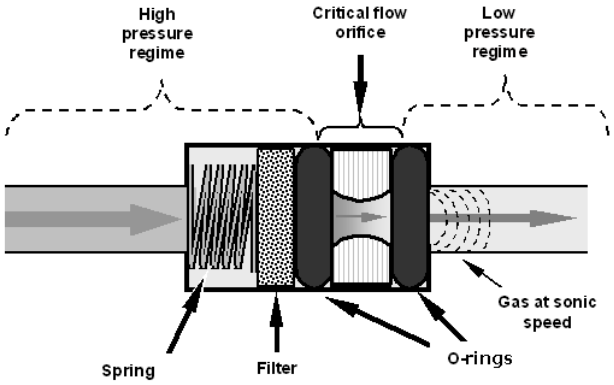

Figure 10-2: Flow Control Assembly & Critical Flow Orifice

The actual flow rate of gas through the orifice (volume of gas per unit of time), depends on the size and shape of the aperture in the orifice. The larger the hole, the more gas molecules (moving at the speed of sound) pass through the orifice.

10.2.2. INTERNAL GAS PRESSURE SENSORS

The T700H includes a three pressure sensors: one each for the diluent gas and the source gas, and one for the pressure regulator controlling the O_3 generator orifice.

A printed circuit assembly (PCA) located near the front of the calibrator near the MFCs includes sensors that measure the pressure of the diluent gas and the source gas currently selected to flow into the calibrator. The calibrator monitors these sensors.

- Should the pressure of one of them fall below 15 PSIG or rise above 36 PSIG a warning is issued.

A second PCA located at the rear of the calibrator includes a third sensor that measures the gas pressure of the diluent gas flowing into the flow control assembly for the O_3 generator. A regulator is also located on the gas input to the O_3 generator that maintains the pressure differential needed for the critical flow orifice to operate correctly.

- Should the pressure of one of these sensors fall below 5 PSIG or rise above 11 PSIG, the calibrator issues a warning.

10.3. ELECTRONIC OPERATION

10.3.1. OVERVIEW

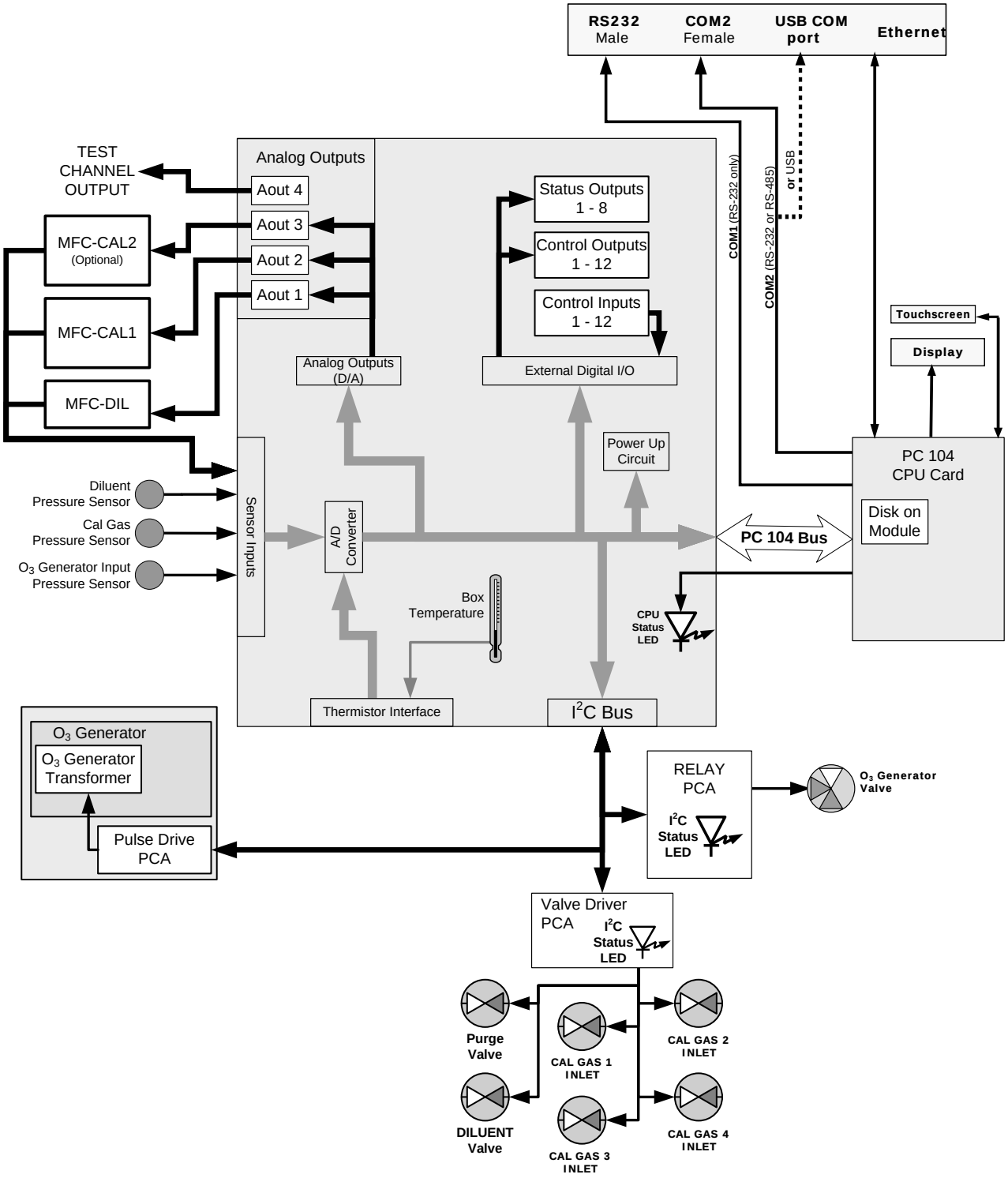

Figure 10-3: T700H Electronic Block Diagram

10.3.2. CPU

The core of the calibrator is a microcomputer (referred to as the CPU) that controls various internal processes, interprets data, makes calculations, and reports results using specialized firmware developed by TAPI. It communicates with the user as well as receives data from and issues commands to a variety of peripheral devices via a separate printed circuit assembly called the motherboard.

The motherboard is directly mounted to the inside rear panel and collects data, performs signal conditioning duties and routes incoming and outgoing signals between the CPU and the calibrator's other major components.

Data are generated by the various subcomponents of the T700H (e.g. flow data from the MFCs). Analog signals are converted into digital data by a unipolar, analog-to-digital converter, located on the motherboard.

A variety of sensors report the physical and operational status of the calibrator's major components, again through the signal processing capabilities of the motherboard. These status reports are used as data for the concentration calculations and as trigger events for certain control commands issued by the CPU. They are stored in memory by the CPU and in most cases can be viewed by the user via the front panel display.

The CPU communicates with the user and the outside world in a variety of manners:

- Through the calibrator's front panel LCD touchscreen interface;
- RS 232 and RS485 serial I/O channels;
- Via Ethernet;
- Various digital and analog outputs, and
- A set of digital control input channels.

Finally, the CPU issues commands via a series of relays and switches (also over the I^2C bus) located on a separate printed circuit assembly to control the function of key electromechanical devices such as heaters, motors and valves.

The unit's CPU card (Figure 10-4) is installed on the motherboard located inside the rear panel. It is a low power (5 VDC, 720mA max), high performance, Vortex86SX-based microcomputer running Windows CE. Its operation and assembly conform to the PC-104 specification and features the following:

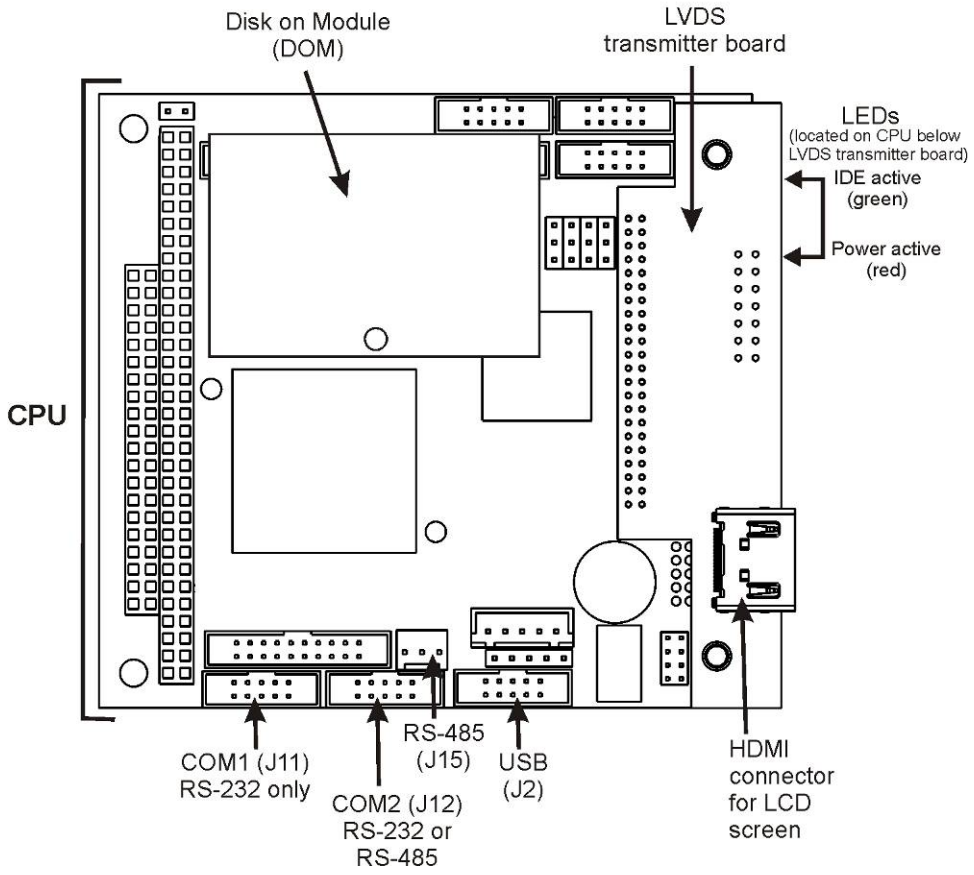

Figure 10-4: T700H CPU Board Annotated

The CPU includes a Disk-on-Module (DOM) and embedded flash chip for non-volatile data storage.

10.3.2.1. Disk-on-Module (DOM)

The DOM is a 44-pin IDE flash chip with a storage capacity up to 256 MB. It is used to store the computer's operating system, the TAPI firmware, and most of the operational data. The LEDs on the DOM indicate power and reading/writing to or from the DOM.

10.3.3. RELAY PCA

The relay PCA is one of the central switching and power distribution units of the calibrator. It contains power relays, valve drivers and status LEDs for all valves, as well as thermocouple amplifiers, power distribution connectors and the two switching power supplies of the calibrator. The relay PCA communicates with the motherboard over the I^2C bus and can be used for detailed trouble-shooting of power problems and valve or heater functionality.

Generally, the relay PCA is located in the right-rear quadrant of the calibrator and is mounted vertically on the back of the same bracket as the instrument's DC power supplies, however the exact location of the relay PCA may differ from model to model (see Figure 3-5).

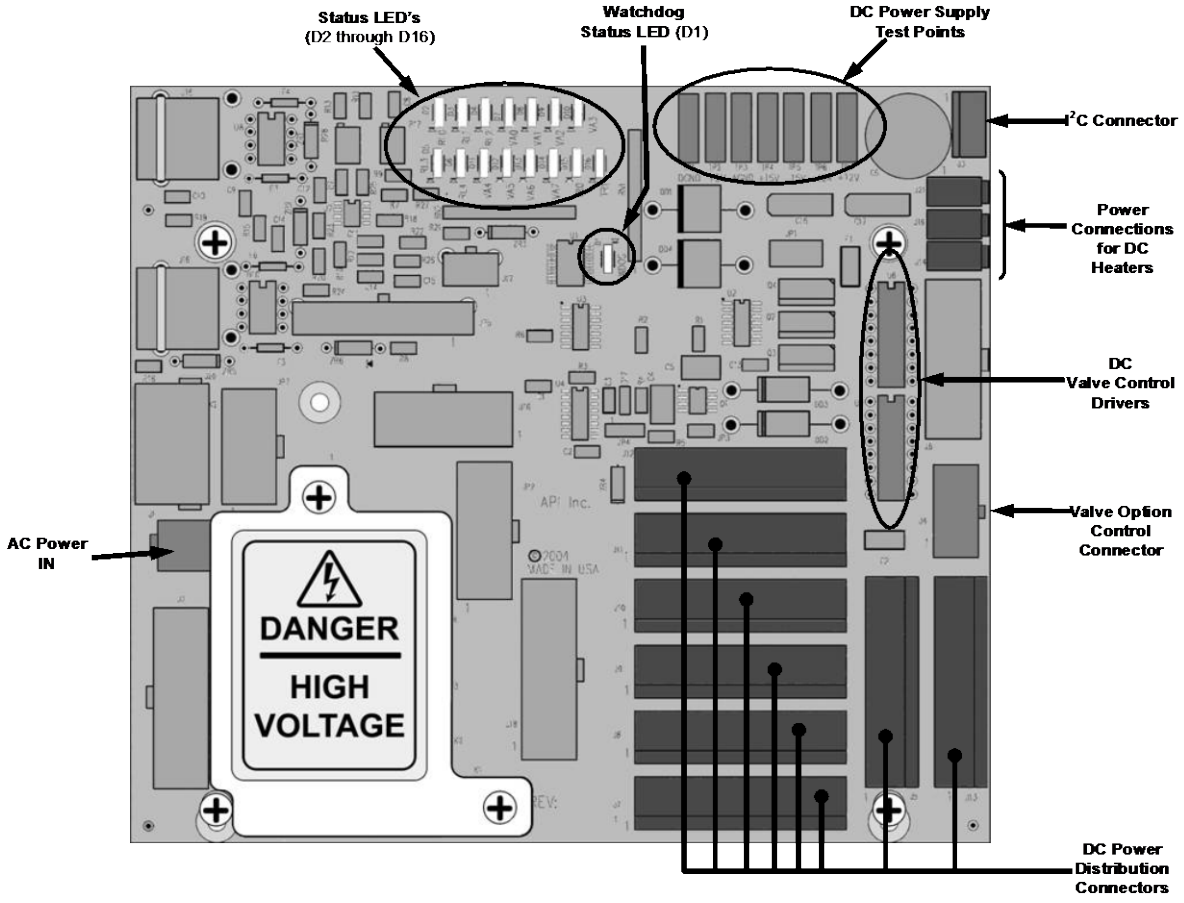

Figure 10-5: Relay PCA

This is the base version of the Relay PCA. It does not include the AC relays and is used in instruments where there are no AC powered components requiring control. A plastic insulating safety shield covers the empty AC Relay sockets.

WARNING

NEVER REMOVE THIS SAFETY SHIELD WHILE THE INSTRUMENT IS PLUGGED IN AND TURNED ON. THE CONTACTS OF THE AC RELAY SOCKETS BENEATH THE SHIELD CARRY HIGH AC VOLTAGES EVEN WHEN NO RELAYS ARE PRESENT

10.3.3.1. Valve Control

The relay PCA also hosts two valve driver chips, each of which can drive up to four valves. In the T700H, the relay PCA controls only those valves associated with the O_3 generator. All valves related to source gas and diluent gas flow are controlled by a separate valve driver PCA (see Section 10.3.4).

10.3.3.2. Relay PCA Status LED & Watch Dog LED

Located on the calibrator's relay PCA is a green LED at D8 to show status of the O_3 generator valve, and a red LED at D1, which is the general operating watchdog indicator. Table 10-1 shows the status of these LEDs and their respective functionality.

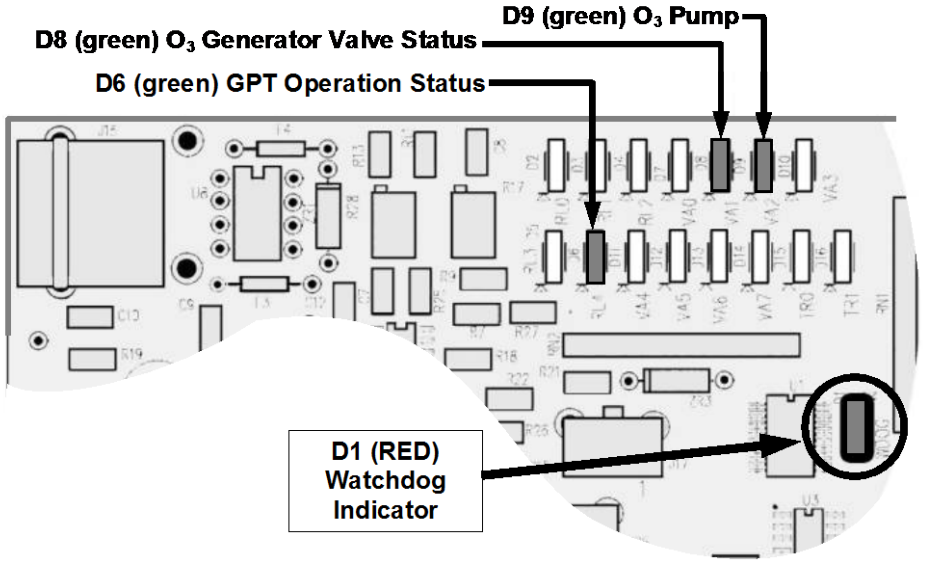

Figure 10-6: Status LED Locations – Relay PCA

Table 10-1: Relay PCA Status LEDs

LED	COLOR	DESCRIPTION	FUNCTION
D1	Red	Watchdog Circuit; I^2C bus operation.	Blinks when I^2C bus is operating properly
D2	not used		
D3-5	SPARE		
D-6	Green	GPT operation	Lit when GPT on
D7	not used		
D8	Green	O_3 generator Valve status	Lit when valve open to O_3 generator gas path
D9	Green	O_3 pump	Lit when pump on
D10	SPARE		
D11	not used		
D12-14	SPARE		
D15-16	not used		

10.3.3.3. Relay PCA Watchdog Indicator (D1)

The most important of the status LEDs on the relay PCA is the red I^2C Bus watchdog LED. It is controlled directly by the calibrator's CPU over the I^2C bus. Special circuitry on the relay PCA watches the status of D1. Should this LED ever stay ON or OFF for 30 seconds (indicating that the CPU or I^2C bus has stopped functioning), this Watchdog Circuit automatically shuts all valves and turns off all heaters and lamps.

10.3.4. VALVE DRIVER PCA

The valves that operate the T700H calibrator's main source gas and diluent gas inputs are controlled by a PCA that is attached directly to the input valve manifold (see Figure 3-5). Like the relay PCA, the valve driver PCA communicates with T700H's CPU through the motherboard over the I^2C bus.

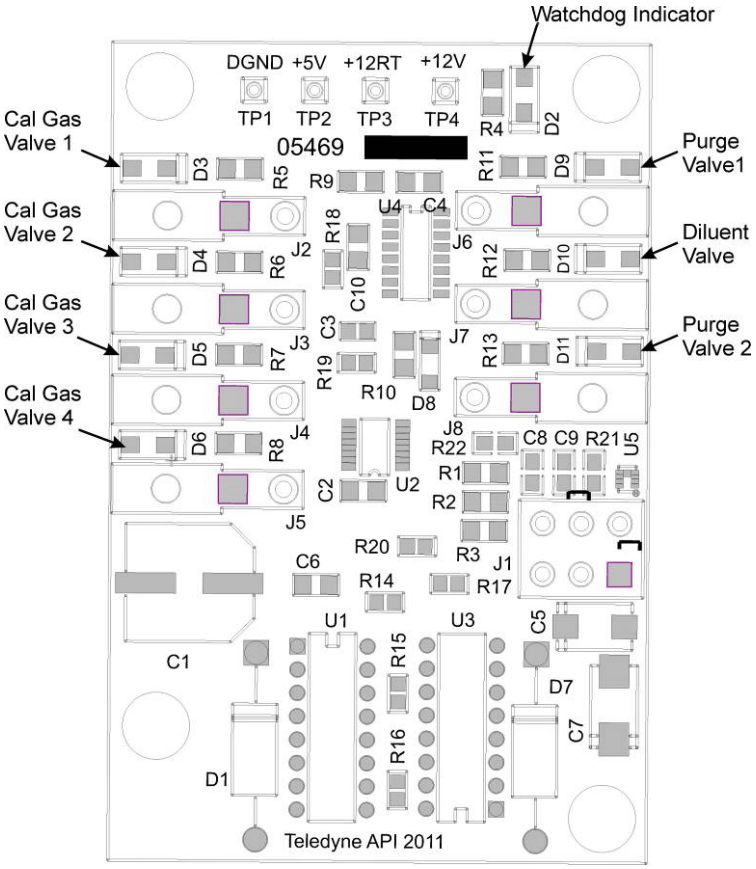

Figure 10-7: Status LED Locations – Valve Driver PCA

10.3.4.1. Valve Driver PCA Watchdog Indicator

The most important of the status LEDs on the relay PCA is the red I^2C Bus watchdog LED. It is controlled directly by the calibrator's CPU over the I^2C bus. Like the watchdog LED on the relay PCA, should this LED ever stay ON or OFF for 30 seconds if the CPU or I^2C bus has stopped functioning, this Watchdog Circuit automatically shuts all valves and turns off all the source gas valves and diluent valve.

10.3.5. MOTHERBOARD

This is the largest electronic assembly in the calibrator and is mounted to the rear panel as the base for the CPU board and all I/O connectors. This printed circuit assembly provides a multitude of functions including A/D conversion, digital input/output, PC-104 to I^2C translation, temperature sensor signal processing and is a pass through for the RS-232 and RS-485 signals.

10.3.5.1. A to D Conversion

Analog signals, such as the voltages received from the calibrator's various sensors, are converted into digital signals that the CPU can understand and manipulate by the analog to digital converter (A/D). Under the control of the CPU, this functional block selects a particular signal input and then coverts the selected voltage into a digital word.

The A/D consists of a voltage-to-frequency (V-F) converter, a programmable logic device (PLD), three multiplexers, several amplifiers and some other associated devices. The V-F converter produces a frequency proportional to its input voltage. The PLD counts the output of the V-F during a specified time period, and sends the result of that count, in the form of a binary number, to the CPU.

The A/D can be configured for several different input modes and ranges but in uni-polar mode with a +5V full scale. The converter includes a 1% over and under-range. This allows signals from -0.05V to +5.05V to be fully converted.

For calibration purposes, two reference voltages are supplied to the A/D converter: Reference ground and +4.096 VDC. During calibration, the device measures these two voltages and outputs their digital equivalent to the CPU. The CPU uses these values to compute the converter's offset and slope, then uses these factors for subsequent calculations.

10.3.5.2. Sensor Inputs

The key analog sensor signals are coupled to the A/D converter through the master multiplexer from two connectors on the motherboard. Terminating resistors (100 kΩ) on each of the inputs prevent crosstalk between the sensor signals.

10.3.5.3. Thermistor Interface

This circuit provides excitation, termination and signal selection for several negative-coefficient, thermistor temperature sensors located inside the calibrator.

10.3.5.4. Analog Outputs

The T700H calibrator comes equipped with one analog output. It can be set by the user to output a signal level representing any one of the test parameters (see Table 5-12) and will output an analog VDC signal that rises and falls in relationship with the value of the chosen parameter.

10.3.5.5. External Digital I/O

The external digital I/O performs two functions.

The **STATUS** outputs carry logic-level (5V) signals through an optically isolated 8-pin connector on the rear panel of the calibrator. These outputs convey on/off information about certain calibrator conditions such as **SYSTEM OK**. They can be used to interface with certain types of programmable devices.

The **CONTROL** outputs can be used to initiate actions by external peripheral devices in conjunction with individual steps of a calibration sequence (see Section 5.5.2.8).

The **CONTROL** inputs can be initiated by applying 5V DC power from an external source such as a PLC or data logger (Section 5.5.1.5). Sequences can be initiated by contact closures on the rear panel.

10.3.5.6. I^2C Data Bus

I^2C is a two-way, clocked, bi-directional, digital serial I/O bus that is used widely in commercial and consumer electronic systems. A transceiver on the motherboard converts data and control signals from the PC-104 bus to I^2C. The data is then fed to the relay board, optional analog input board and valve driver board circuitry.

10.3.5.7. Power-up Circuit

This circuit monitors the +5V power supply during calibrator start-up and sets the analog outputs, external digital I/O ports, and I^2C circuitry to specific values until the CPU boots and the instrument software can establish control.

10.3.6. INPUT GAS PRESSURE SENSOR PCA

This PCA, physically located to the just to the left of the MFCs, houses two pressure sensors that measure the pressure of the incoming diluent gas and calibration gases relative to ambient pressure. Pneumatically, both sensors measure their respective gases just upstream from the associated MFC.

This data is used in calculating the concentration of calibration mixtures.

The following TEST functions are viewable from the instrument's front panel:

- **CAL PRES** - the pressure of the selected calibration gas input reported in PSIG.
- **DIL PRES** - the pressure of the diluent gas input reported in PSIG.
- **REG PRES** – the pressure of the O_3 Generator regulator input reported in PSIG,

10.3.7. POWER SUPPLY AND CIRCUIT BREAKER

The T700H calibrator operates in two main AC power ranges: 100-120 VAC and 220-240 VAC (both ± 10%) between 47 and 63 Hz. A 5-ampere circuit breaker is built into the ON/OFF switch. In case of a wiring fault or incorrect supply power, the circuit breaker will automatically turn off the calibrator.

NOTE

The T700H calibrator is equipped with a universal power supply that allows it to accept any AC power configuration, within the limits specified in Table 2-2.

CAUTION
Should the power circuit breaker trip correct the condition causing this situation before turning the calibrator back on.

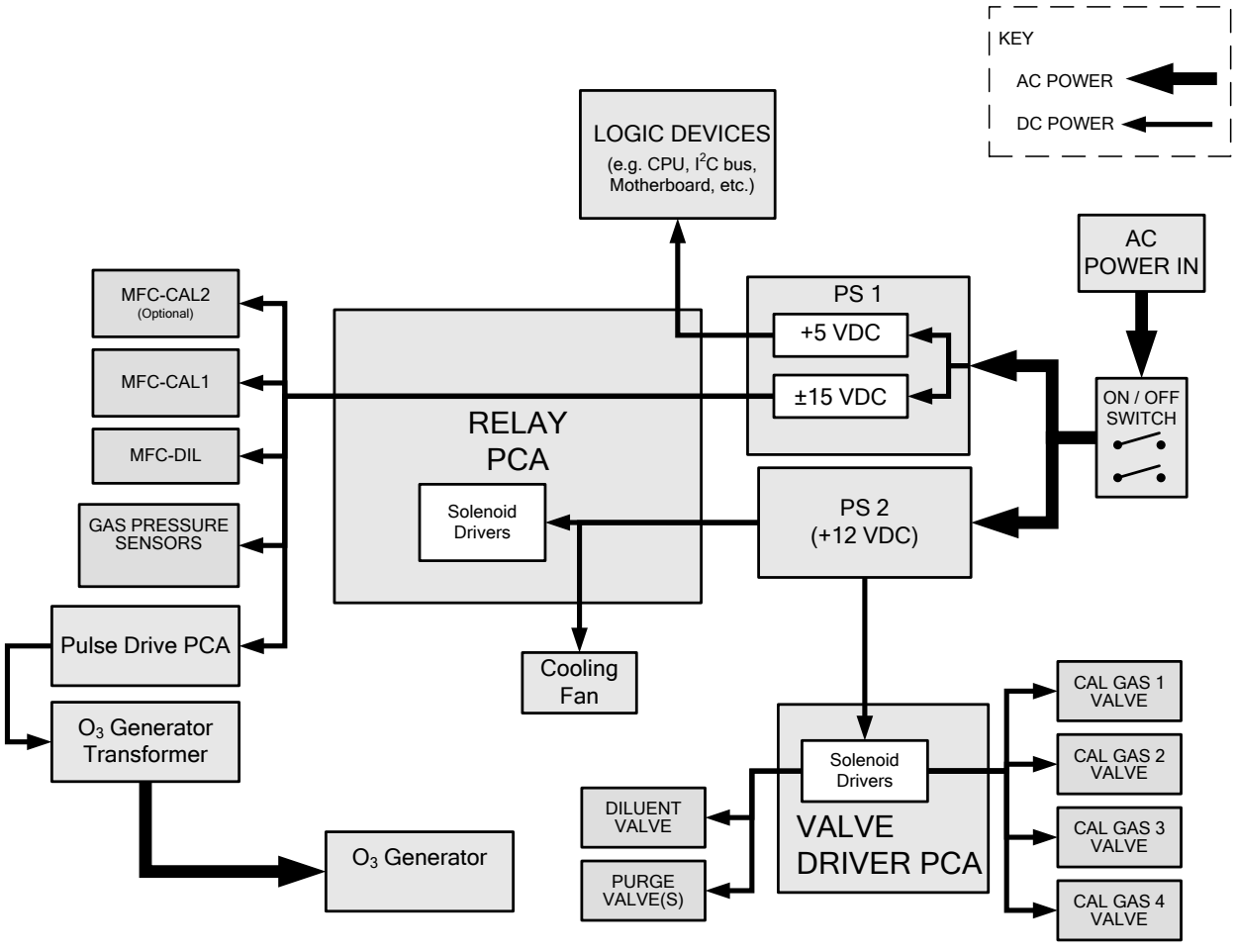

Figure 10-8: T700H Power Distribution Block Diagram

10.4. FRONT PANEL TOUCHSCREEN/DISPLAY INTERFACE

The most commonly used method for communicating with the T700H Source Monitoring Dilution Calibrator is via the instrument's front panel LCD touchscreen display from where users can input data and receive information directly.

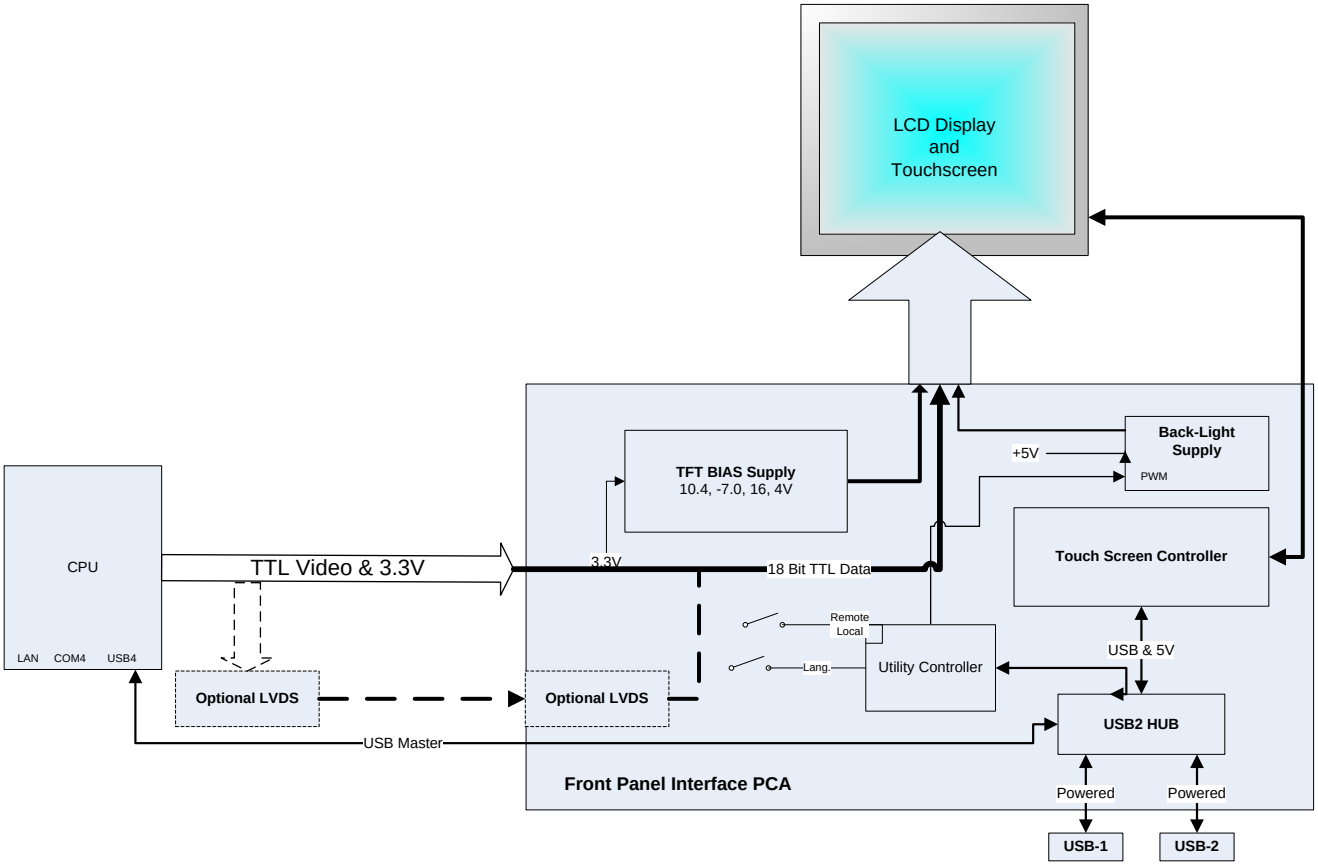

Figure 10-9: Front Panel Display Interface Block Diagram

The LCD display is controlled directly by the CPU board. The touchscreen is interfaced to the CPU by means of a touchscreen controller that connects to the CPU via the internal USB bus and emulates a computer mouse.

10.4.1.1. Front Panel Interface PCA

The front panel interface PCA controls the various functions of the display and touchscreen. For driving the display it provides connection between the CPU video controller and the LCD display module. This PCA also contains:

- power supply circuitry for the LCD display module
- a USB hub that is used for communications with the touchscreen controller and the two front panel USB device ports
- the circuitry for powering the display backlight

10.5. SOFTWARE OPERATION

The T700H calibrator's core module is a high performance, X86-based microcomputer running Windows CE. On top of the Windows CE shell, special software developed by TAPI interprets user commands from various interfaces, performs procedures and tasks and stores data in the CPU's memory devices. Figure 10-10 shows a block diagram of this software functionality.

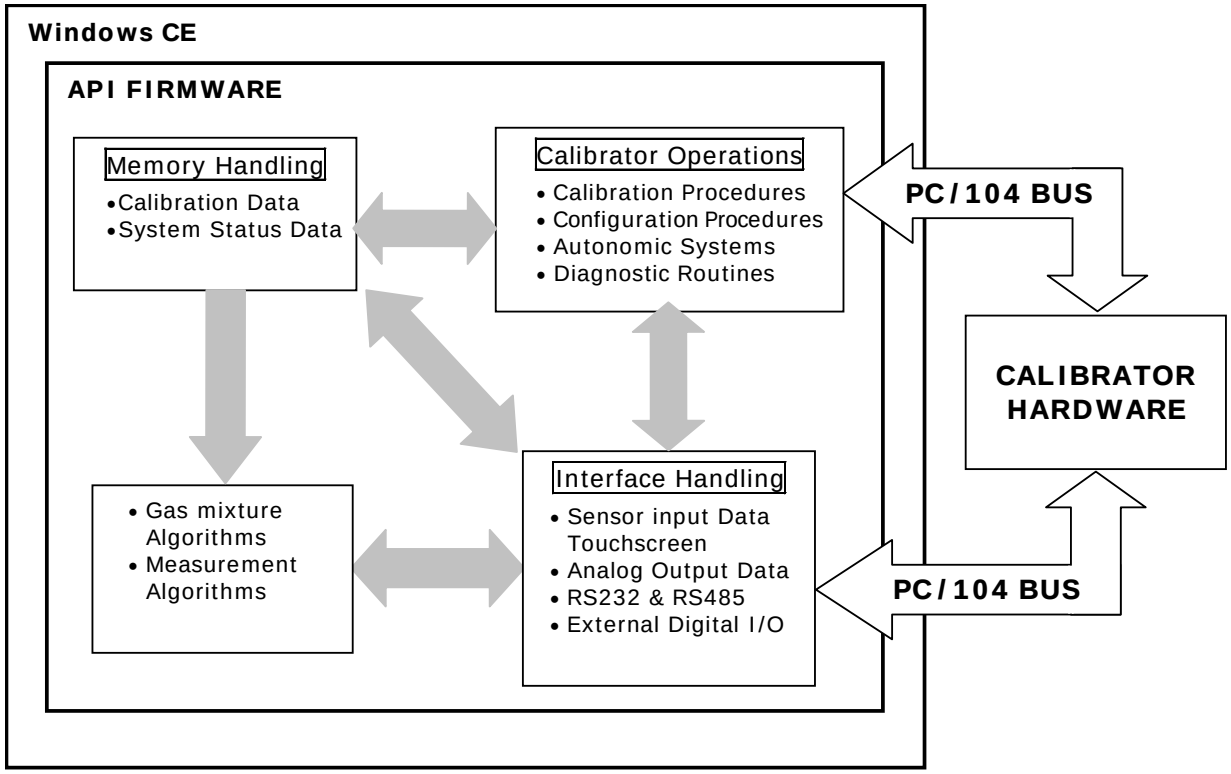

Figure 10-10: Schematic of Basic Software Operation

10.6. OZONE GAS GENERATION AND AIR FLOW

The T700H comes fitted with a specialized pulse drive corona discharge ozone generator. The ozone generator is used in GPT calibrations to produce NO_2 gas from NO gas.

Due to its toxicity and aggressive chemical behavior, O_3 must also be removed from the gas stream before it can be vented through the exhaust outlet.

CAUTION
GENERAL SAFETY HAZARD

Ozone (O_3) is a toxic gas.

Obtain a Material Safety Data Sheet (MSDS) for this gas. Read and rigorously follow the safety guidelines described there.

Always ensure that the plumbing of the O_3 generation and supply system is maintained and leak-free.

10.6.1. THE O_3 GENERATOR

The T700H uses a dual-dielectric, Corona Discharge (CD) tube for creating its O_3, which is capable of producing high concentrations of ozone efficiently and with very little excess heat (see Figure 10-11). The primary component of the generator is a glass tube with hollow walls of which the outermost and innermost surfaces are coated with electrically conductive material.

Air flows through the glass tube, between the two conductive coatings, in effect creating a capacitor with the air and glass acting as the dielectric. The layers of glass also separate the conductive surfaces from the air stream to prevent reaction with the O_3. As the capacitor charges and discharges, electrons are accelerated across the air gap and collide with the O_2 molecules in the air stream splitting them into elemental oxygen.

Some of these oxygen atoms recombine with O_2 to O_3. The quantity of ozone produced is dependent on factors such as the voltage and frequency of the alternating current applied to the CD cells. When enough high-energy electrons are produced to ionize the O_2 molecules, a light emitting, gaseous plasma is formed, which is commonly referred to as a corona, hence the name corona discharge generator.

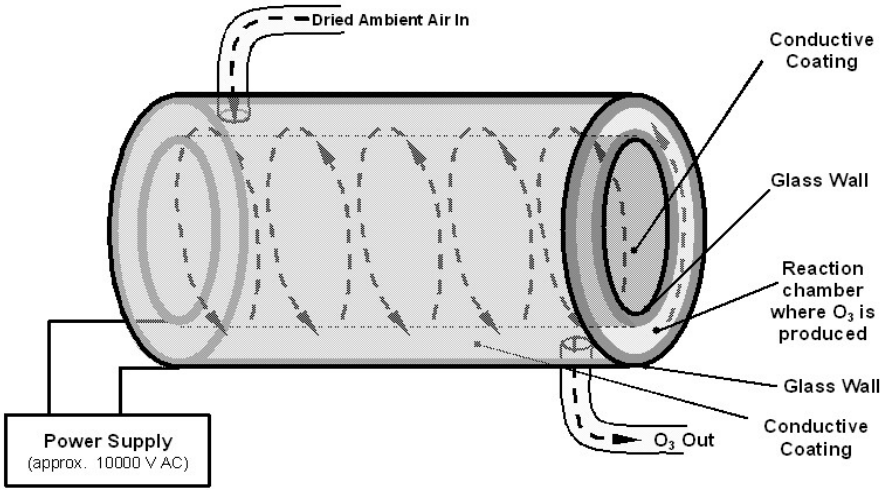

Figure 10-11: O_3 Generator Principle

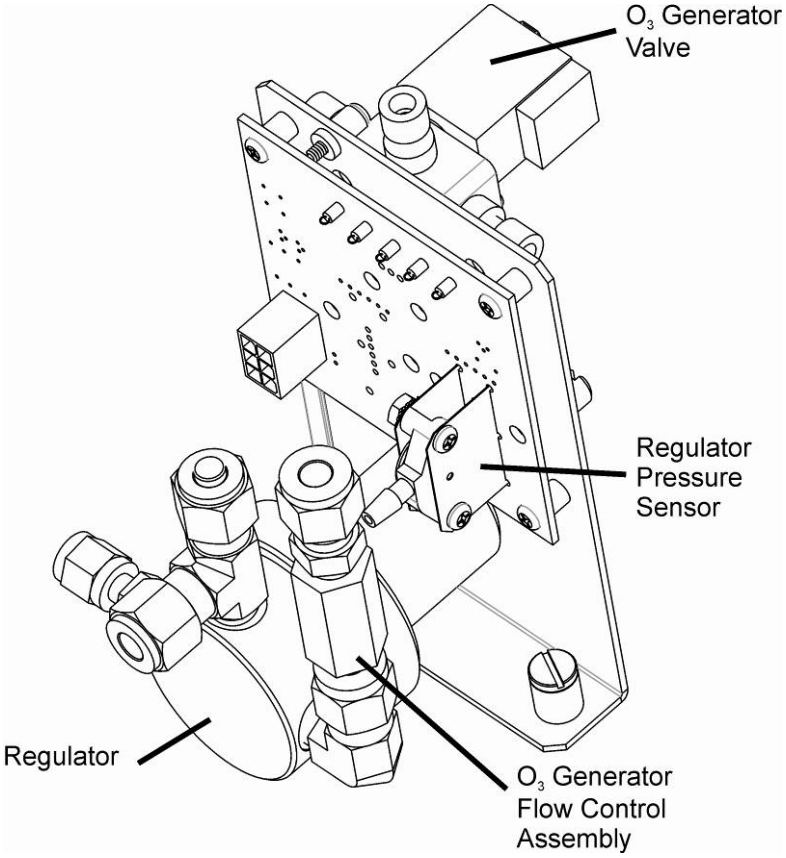

Figure 10-12: O_3 Generator Valve and Flow Control Locations

10.6.2. O_3 GENERATOR – ELECTRONIC OPERATION

Electronically the O_3 generator and its subcomponents act as peripheral devices operated by the CPU via the motherboard. Commands from the CPU are sent to the motherboard and forwarded to the O_3 generator via the calibrator's I^2C bus.

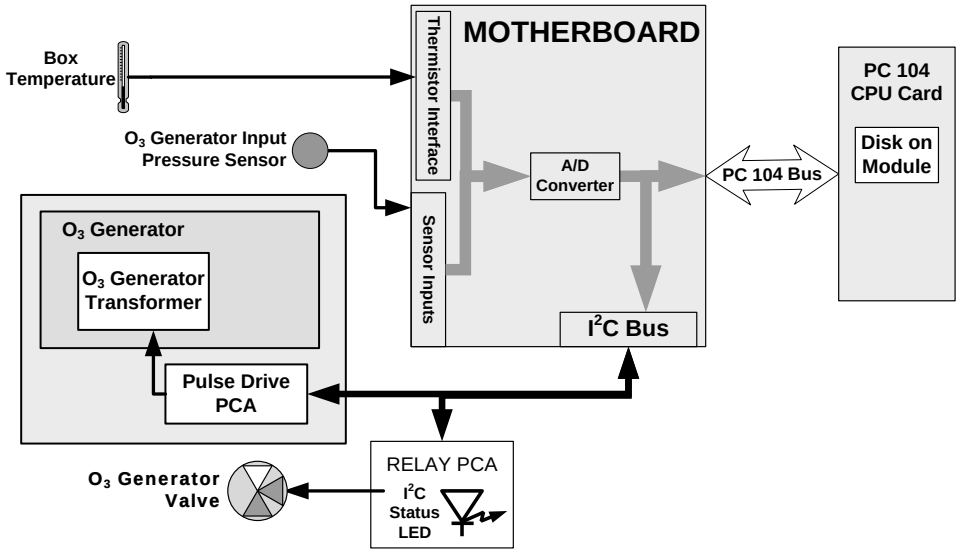

Figure 10-13: O_3 Generator – Electronic Block Diagram

10.6.2.1. Pressure Sensor for the O_3 Generator

A pressure sensor, located on the O_3 generator pressure sensor PCA (see Figure 10-12), monitors the output gas pressure of the regulator on the O_3 generator's zero air supply. The regulator is adjusted at the factory to maintain a pressure of 20 PSIG on this line. If the pressure drops below 15 (TBD) PSIG or rises above 25 (TBD) PSIG a warning is issued.

This page intentionally left blank.

APPENDIX A –Software Documentation, T700H

(Note: neither photometer parameters nor perm tube parameters apply to the T700H)

APPENDIX A-1: Software Menu Trees

APPENDIX A-2: Setup Variables Available Via Serial I/O

APPENDIX A-3: Warnings and Test Measurements Via Serial I/O

APPENDIX A-4: Signal I/O Definitions

APPENDIX A-5: MODBUS Register Map

APPENDIX A-6: Terminal Command Designators

APPENDIX A-1: Software Menu Trees

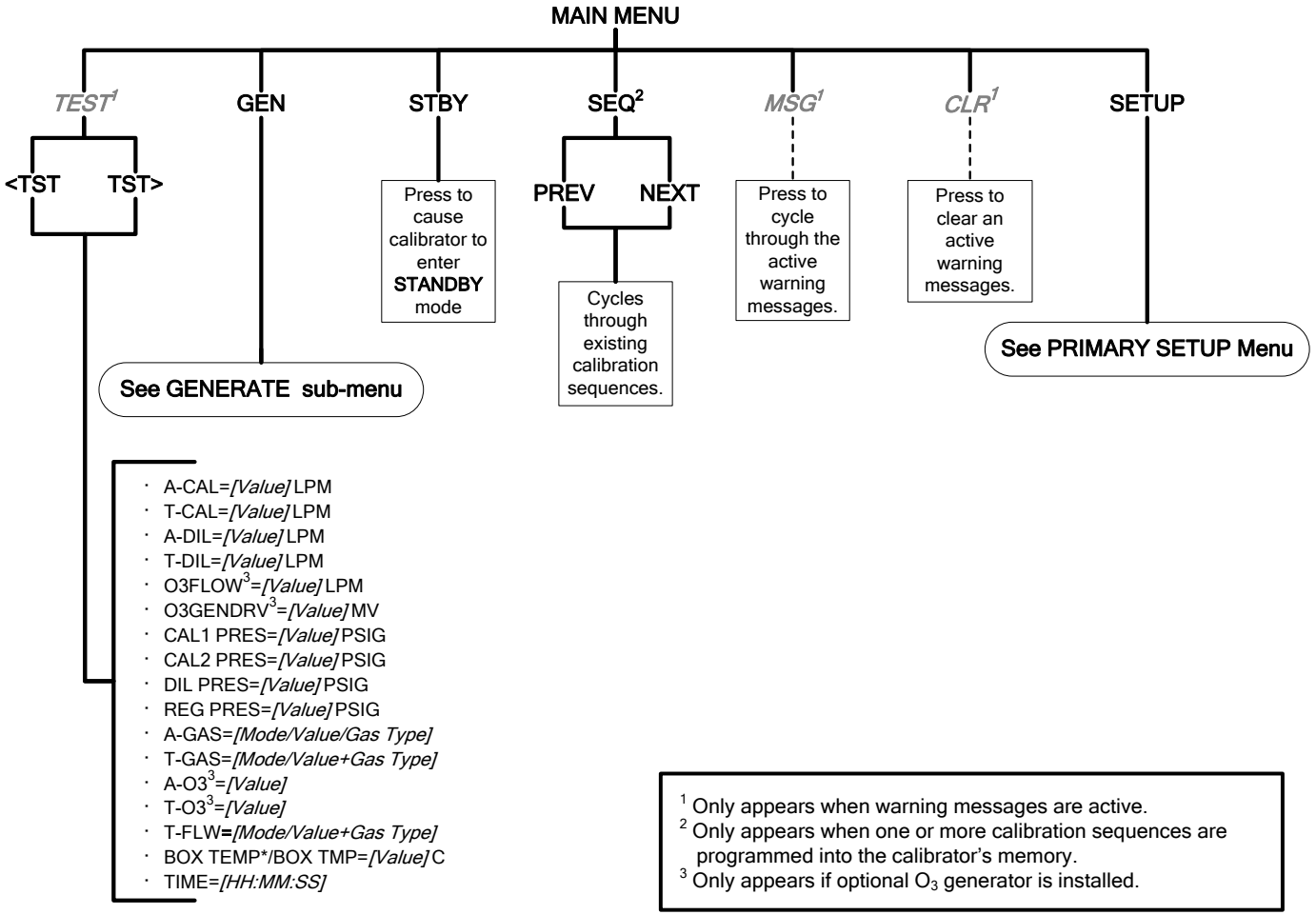

Figure A-1: Main Menu

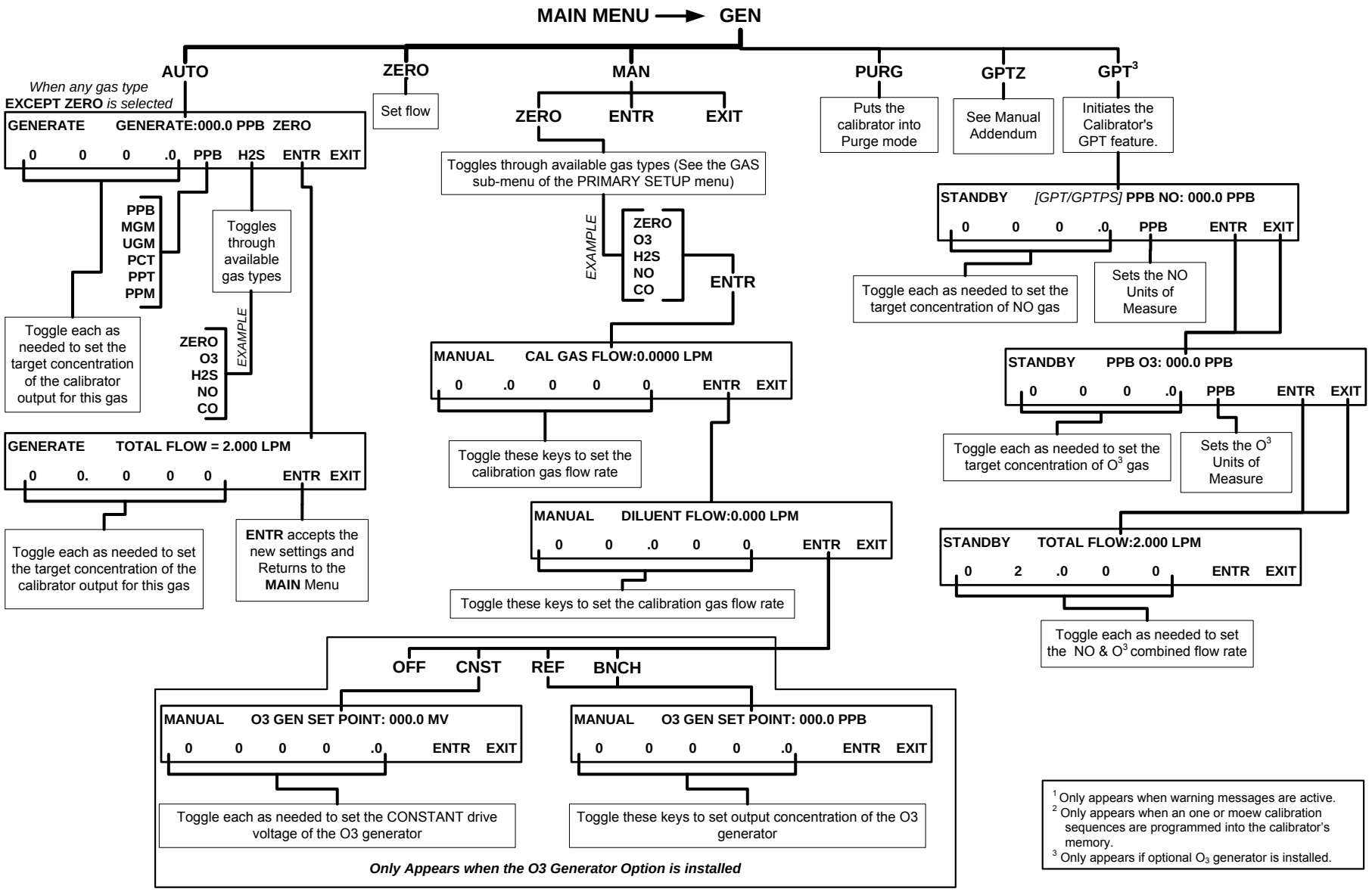

Figure A-2: MAIN Menu - GENERATE Submenu

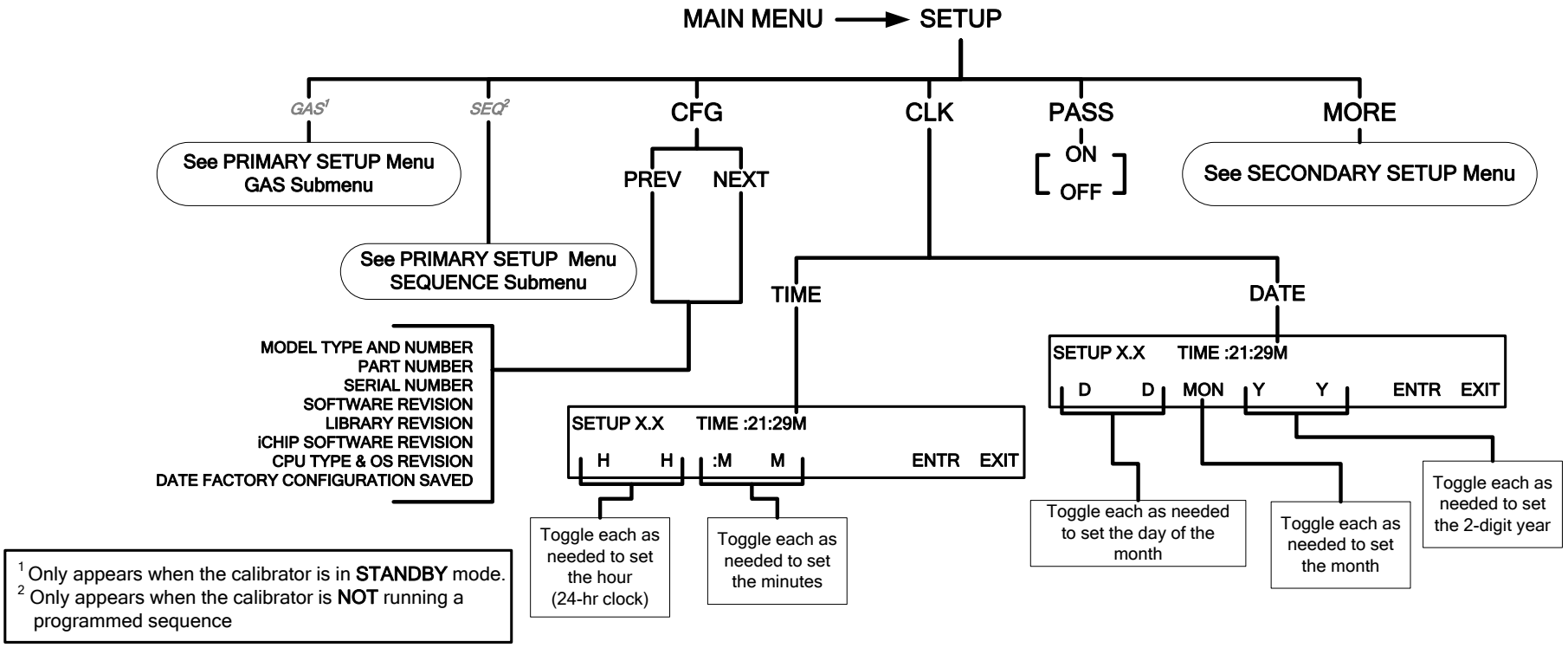

Figure A-3: PRIMARY SETUP MENU - Basics

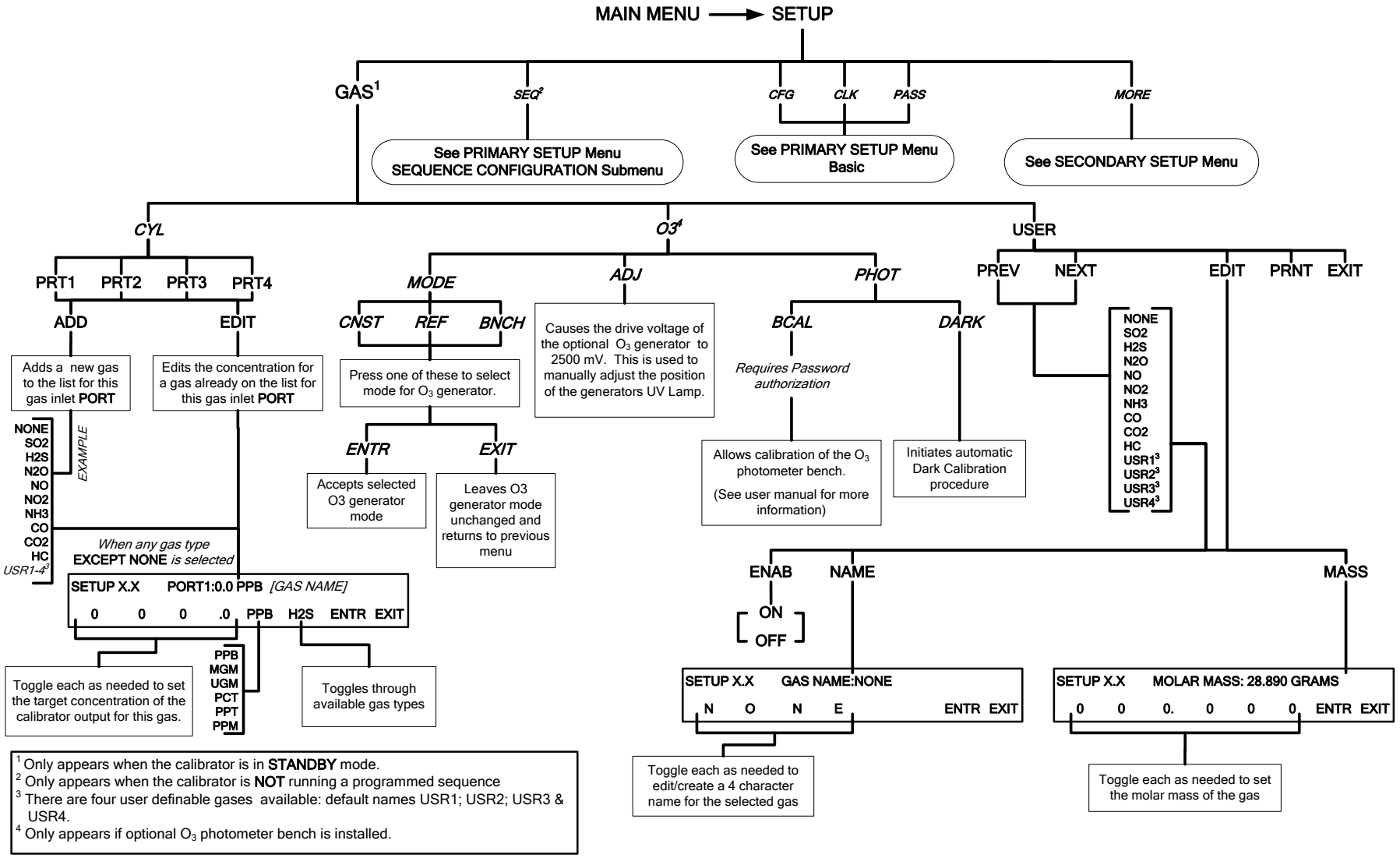

Figure A-4: PRIMARY SETUP Menu – GAS Submenu for source gas configuration

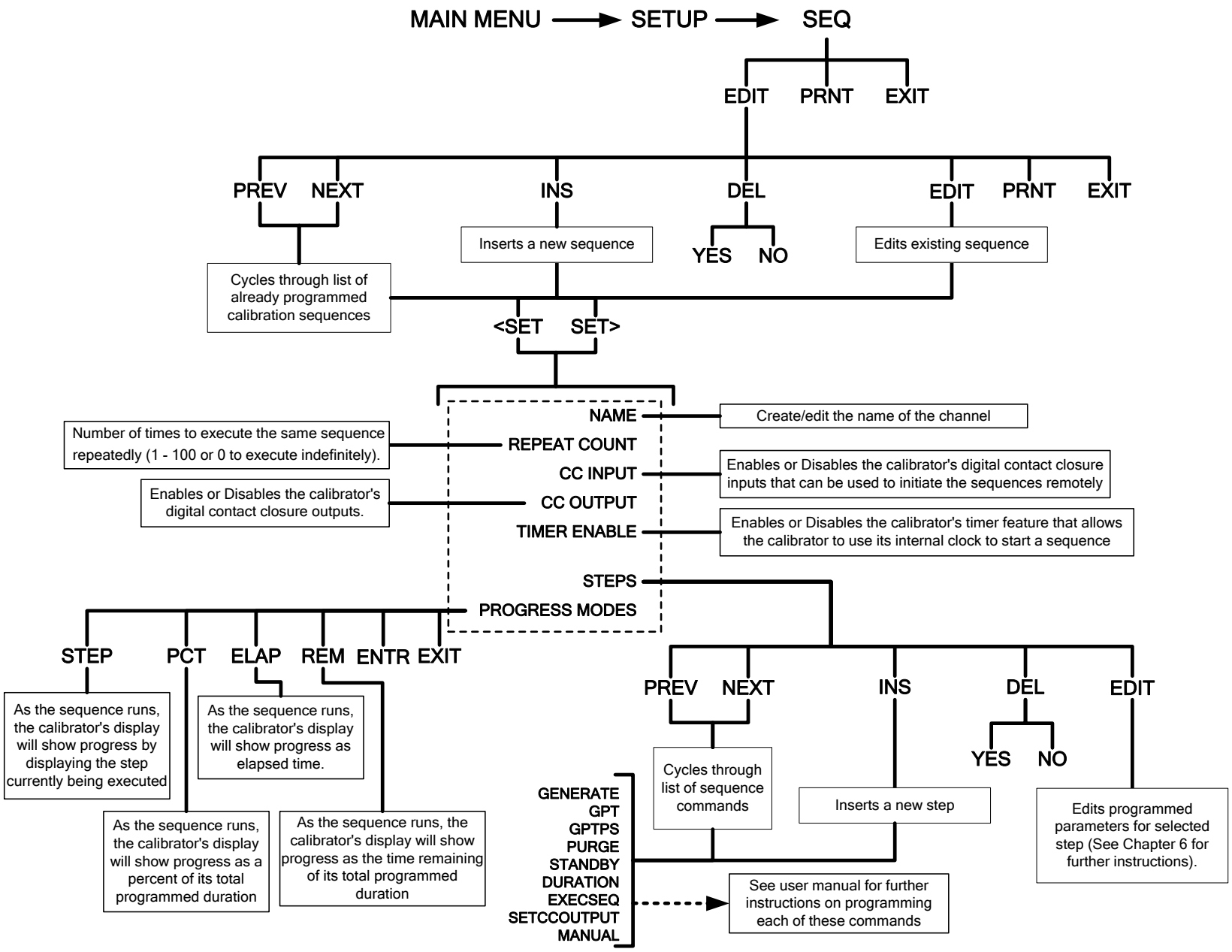

Figure A-5: PRIMARY SETUP Menu - SEQUENCE Submenu

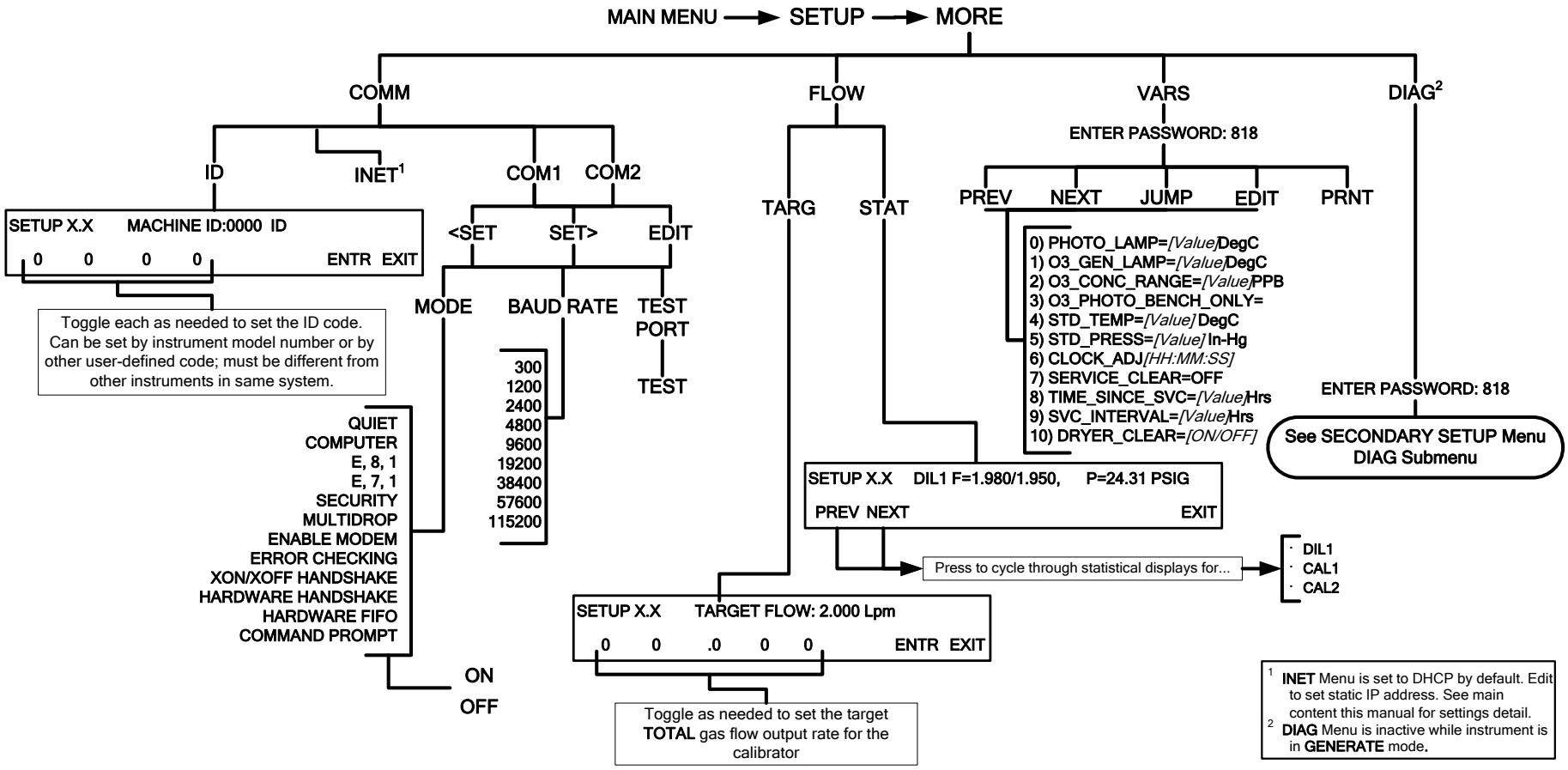

Figure A-6: SECONDARY SETUP Menu - Basic

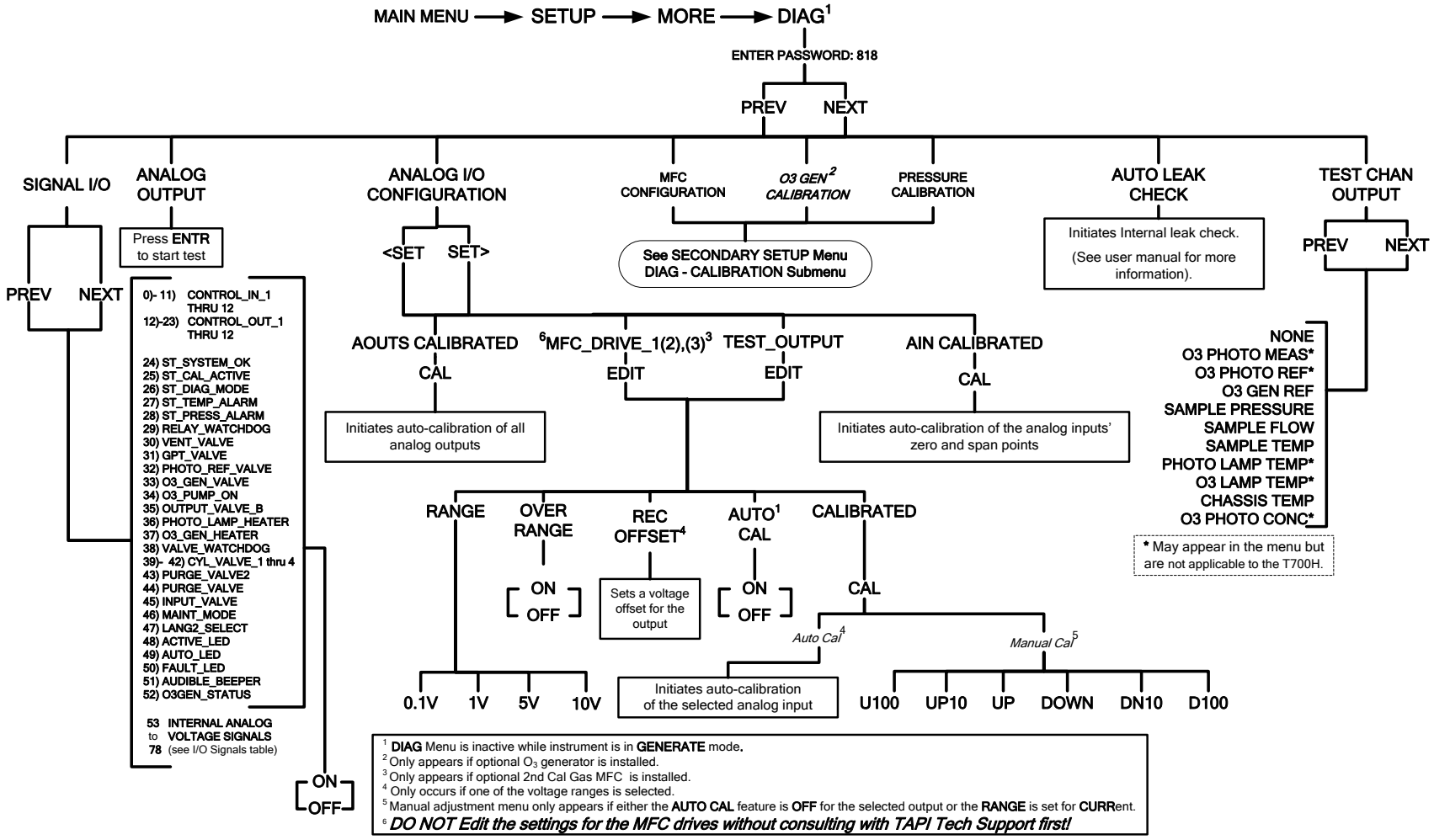

Figure A-7: SECONDARY SETUP Menu: DIAG

This page intentionally left blank.

APPENDIX A-2: Setup Variables for Serial I/O

Table A-1: Setup Variables (Note: Neither photometer nor perm tube apply to the T700H)

Setup Variable	Numeric Units	Default Value	Value Range	Description
Low Access Level Setup Variables (818 password)				
PHOTO_LAMP	ºC	58 Warnings: 56–61	0–100	Photometer lamp temperature set point and warning limits.
O3_GEN_LAMP	ºC	48 Warnings: 43–53	0–100	O_3 generator lamp temperature set point and warning limits.
O3_CONC_RANGE	PPB	500	0.1–20000	O_3 concentration range for test channel analog output.
O3_PHOTO_BENCH_ONLY	—	ON	OFF, ON	O_3 bench control flag. ON turns on pump and switches measure/reference valve only in bench generation mode.
STD_TEMP	ºC	25	0–100	Standard temperature for unit conversions.
STD_PRESS	"Hg	29.92	15–50	Standard pressure for unit conversions.
CLOCK_ADJ	Sec./Day	0	-60–60	Time-of-day clock speed adjustment.
SERVICE_CLEAR	—	OFF	OFF ON	ON resets the service interval timer.
TIME_SINCE_SVC	Hours	0	0–500000	Time since last service.
SVC_INTERVAL	Hours	0	0–100000	Sets the interval between service reminders.
DRYER_CLEAR [1]	—	OFF	OFF ON	ON resets the dryer service interval timer.

[1] 700H only

APPENDIX A-3: Warnings and Test Functions

Table A-2: Warning Messages (Note: Neither photometer nor perm tube apply to the T700H)

Name [1]	Message Text	Description
WSYSRES	SYSTEM RESET	Instrument was power-cycled or the CPU was reset.
WDATAINIT	DATA INITIALIZED	Data storage was erased.
WCONFIGINIT	CONFIG INITIALIZED	Configuration storage was reset to factory configuration or erased.
WPHOTOLTEMP	PHOTO LAMP TEMP WARNING	Photometer lamp temperature outside of warning limits specified by *PHOTO_LAMP* variable.
WO3GENTEMP	O3 GEN LAMP TEMP WARNING	O_3 generator lamp temperature outside of warning limits specified by *O3_GEN_LAMP* variable.
WPERMTEMP1 [6]	PERM TUBE #1 TEMP WARNING	Permeation tube #1 temperature outside of warning limits specified by *PERM_SET1* variable.
WPERMTEMP2 [3]	PERM TUBE #2 TEMP WARNING	Permeation tube #2 temperature outside of warning limits specified by *PERM_SET2* variable.
WPHOTOREF	PHOTO REFERENCE WARNING	Photometer reference reading less than 2500 mV or greater than 4999 mV.
WLAMPSTABIL	PHOTO LAMP STABILITY WARNING	Photometer lamp reference step changes occur more than 25% of the time.
WO3GENREF	O3 GEN REFERENCE WARNING	O_3 reference detector drops below 5 mV during reference feedback O_3 generator control.
WREGPRESS	REGULATOR PRESSURE WARNING	Regulator pressure outside of warning limits specified by *REG_PRESS_LIM* variable.
WMFCPRESS	MFC PRESSURE WARNING	Any MFC pressure outside of warning limits specified by *PRESS_LIMIT* variable.
WMFCFLOW	MFC FLOW WARNING	Any MFC drive less than 10% of full scale or greater than full scale.
WMFCCAL	MFC CALIBRATION WARNING	Any MFC sensor offset greater than allowable limit.
WO3PUMP	O3 PUMP WARNING	O_3 pump failed to turn on within timeout period specified by *O3_PUMP_TIMEOUT* variable.
WOUTPUT	INVALID OUTPUT WARNING	An invalid output has been selected for the requested gas generation. For example, output B was selected when generating ozone.
WREARBOARD	REAR BOARD NOT DET	Rear board was not detected during power up.
WRELAYBOARD	RELAY BOARD WARN	Firmware is unable to communicate with the relay board.
WVALVEBOARD	VALVE BOARD WARN	Firmware is unable to communicate with the valve board.
WLAMPDRIVER	LAMP DRIVER WARN	Firmware is unable to communicate with either the O_3 generator or photometer lamp I^2C driver chip.

Name [1]	Message Text	Description
WFRONTPANEL	FRONT PANEL WARN	Firmware is unable to communicate with the front panel.
WMFCCOMM [4]	MFC COMMUNICATION WARNING	Firmware is unable to communicate with any MFC.
WANALOGCAL	ANALOG CAL WARNING	The A/D or at least one D/A channel has not been calibrated.

[1] The name is used to request a message via the RS-232 interface, as in “T BOXTEMP”.

[2] O_3 photometer stability measurement option.

[3] Dual permeation tube option.

[4] I^2C MFCs.

[5] Low range option.

[6] Permeation tube option.

Table A-3: Test Functions

Name [1]	Units	Description
A-CAL	LPM	Actual cal. gas flow rate.
T-CAL	LPM	Target cal. gas flow rate.
A-DIL	LPM	Actual diluent flow rate.
T-DIL	LPM	Target diluent flow rate.
O3FLOW	LPM	O3 generator flow rate. Note: this is simply a constant, specified by the O3_GEN_FLOW variable.
O3GENDRV	MV	O3 generator lamp drive output.
CAL PRES	PSIG	Cal. gas pressure.
DIL PRES	PSIG	Diluent pressure.
REG PRES	PSIG	Regulator pressure.
A-GAS	*(per user selection)*	Actual concentration being generated, computed from real-time inputs.
T-GAS	*(per user selection)*	Target concentration to generate.
A-O3	*(per user selection)*	Actual mV drive value for the O3 generator
T-O3	*(per user selection)*	Target mV drive value for the O3 generator
T-FLW	LPM	Target total flow
BOX TMP	BOX TEMP=31.2 C	Internal chassis temperature.
TEST[1]	TEST=2753.9 MV	Value output to TEST_OUTPUT analog output, selected with TEST_CHAN_ID variable.
TIME	TIME=14:48:01	Current instrument time of day clock.

[1] Only appears when the TEST channel has been activated.

APPENDIX A-4: Signal I/O Definitions

Table A-4: Signal I/O Definitions (Note: Neither photometer nor perm tube apply to the T700H)

Signal Name	Bit or Channel Number	Description
U11, J1004, control inputs, pins 1-6 = bits 0-5, read, default I/O address 321 hex		
CONTROL_IN_1 – CONTROL_IN_6	0–5	0 = input asserted 1 = de-asserted
	6–7	Always 1
U14, J1006, control inputs, pins 1-6 = bits 0-5, read, default I/O address 325 hex		
CONTROL_IN_7 – CONTROL_IN_12	0–5	0 = input asserted 1 = de-asserted
	6–7	Always 1
U17, J1008, control outputs, pins 1-8 = bits 0-7, write, default I/O address 321 hex		
CONTROL_OUT_1 – CONTROL_OUT_8	0–7	0 = output asserted 1 = de-asserted
U21, J1008, control outputs, pins 9-12 = bits 0-3, write, default I/O address 325 hex		
CONTROL_OUT_9 – CONTROL_OUT_12	0–3	0 = output asserted 1 = de-asserted
U7, J108, internal inputs, pins 9-16 = bits 0-7, read, default I/O address 322 hex		
	0–7	Spare
U8, J108, internal outputs, pins 1-8 = bits 0-7, write, default I/O address 322 hex		
	0–7	Spare
U24, J1017, A status outputs, pins 1-8 = bits 0-7, write, default I/O address 323 hex		
ST_SYSTEM_OK	0	0 = system OK 1 = any alarm condition or in diagnostics mode
	1	Spare
ST_CAL_ACTIVE	2	0 = executing sequence 1 = not executing sequence
ST_DIAG_MODE	3	0 = in diagnostic mode 1 = not in diagnostic mode
ST_TEMP_ALARM	4	0 = any temperature alarm 1 = all temperatures OK
ST_PRESS_ALARM	5	0 = any pressure alarm 1 = all pressures OK
	6–7	Spare
U27, J1018, B status outputs, pins 1-8 = bits 0-7, write, default I/O address 324 hex		
	0–7	Spare

Signal Name	Bit or Channel Number	Description
Relay board digital output (PCF8575), write, default I^2C address 44 hex		
RELAY_WATCHDOG	0	Alternate between 0 and 1 at least every 5 seconds to keep relay board active
VENT_VALVE	1	0 = vent valve open 1 = close
PERM_HTR_2 [2]	2	0 = permeation tube #2 heater on 1 = off
	3–4	Spare
GPT_VALVE	5	0 = open GPT bypass valve 1 = close
PHOTO_REF_VALVE	6	0 = photometer valve in reference position 1 = measure position
O3_GEN_VALVE	7	0 = open O_3 generator valve 1 = close
O3_PUMP_ON	8	0 = pump on for photometer to measure O_3 1 = off
O3_DIVERT_VALVE	9	0 = open O3 divert valve 1 = close
OUTPUT_VALVE_B [1]	10	0 = open output shut-off valve B 1 = close
PERM_VALVE_1 [6]	11	0 = open permeation tube #1 valve 1 = close
PERM_VALVE_2 [2]	12	0 = open permeation tube #2 valve 1 = close
PERM_HTR_1 [6]	13	0 = permeation tube #1 heater on 1 = off
PHOTO_LAMP_HEATER	14	0 = O_3 photometer lamp heater on 1 = off
O3_GEN_HEATER	15	0 = O_3 generator lamp heater on 1 = off

Signal Name	Bit or Channel Number	Description
Valve board digital output (PCA9557), write, default I^2C address 3A hex		
VALVE_WATCHDOG	0	Alternate between 0 and 1 at least every 5 seconds to keep valve board active
CYL_VALVE_1	1	1 = open cylinder gas valve 1 0 = close
CYL_VALVE_2	2	1 = open cylinder gas valve 2 0 = close
CYL_VALVE_3	3	1 = open cylinder gas valve 3 0 = close
CYL_VALVE_4	4	1 = open cylinder gas valve 4 0 = close
PURGE_VALVE	5	1 = open purge valve 0 = close
INPUT_VALVE	6	1 = open input (zero-air) shut-off valve 0 = close
DIL_VALVE_2 [5]	7	1 = open diluent valve #2 0 = open diluent valve #1
Front panel I^2C keyboard, default I^2C address 4E hex		
MAINT_MODE	5 (input)	0 = maintenance mode 1 = normal mode
LANG2_SELECT	6 (input)	0 = select second language 1 = select first language (English)
SEQUENCE_LED	8 (output)	0 = sequence LED on (executing sequence) 1 = off
AUTO_TIMER_LED	9 (output)	0 = automatic timer LED on (automatic sequence timer enabled) 1 = off
FAULT_LED	10 (output)	0 = fault LED on 1 = off
AUDIBLE_BEEPER	14 (output)	0 = beeper on (for diagnostic testing only) 1 = off

Signal Name	Bit or Channel Number	Description
Rear board primary MUX analog inputs		
PHOTO_DET	0	Photometer detector reading
O3_GEN_REF_DET	1	O_3 generator reference detector reading
DIL_PRESS	2	Diluent pressure
CAL_PRESS	3	Cal. gas pressure
	4	Temperature MUX
O3_PERM_PRESS	5	Ozone/perm tube pressure
	6–7	Spare
MFC_FLOW_3 [4]	8	MFC 3 (cal. gas #2) flow output
REF_4096_MV	9	4.096V reference from MAX6241
PHOTO_FLOW	10	Photometer flow
PHOTO_SAMP_PRES	11	Photometer sample pressure
MFC_FLOW_1	12	MFC 1 (diluent) flow output
MFC_FLOW_2	13	MFC 2 (cal. gas #1) flow output
	14	DAC loopback MUX
REF_GND	15	Ground reference
Rear board temperature MUX analog inputs		
BOX_TEMP	0	Internal box temperature
PHOTO_SAMP_TEMP	1	Photometer sample temperature
PHOTO_LAMP_TEMP	2	Photometer lamp temperature
O3_GEN_TEMP	3	O_3 generator lamp temperature
PERM_TEMP_1 [6]	4	Permeation tube #1 temperature
PERM_TEMP_2 [2]	5	Permeation tube #2 temperature
	6–7	Spare
Rear board DAC MUX analog inputs		
DAC_CHAN_1	0	DAC channel 0 loopback
DAC_CHAN_2	1	DAC channel 1 loopback
DAC_CHAN_3	2	DAC channel 2 loopback
DAC_CHAN_4	3	DAC channel 3 loopback
Rear board analog outputs		
MFC_DRIVE_1	0	MFC 1 (diluent) flow drive
MFC_DRIVE_2	1	MFC 2 (cal. gas #1) flow drive
MFC_DRIVE_3 [4]	2	MFC 3 (cal. gas #2) flow drive
TEST_OUTPUT	3	Test measurement output
I^2C analog output (AD5321), default I^2C address 18 hex		
PHOTO_LAMP_DRIVE	0	O_3 photometer lamp drive (0–5V)
I^2C analog output (AD5321), default I^2C address 1A hex		
O3_GEN_DRIVE	0	O_3 generator lamp drive (0–5V)

[1] Must be enabled with a factory option bit.

[2] Dual permeation tube option.

[4] Triple-MFC option.

[5] Dual diluent option.

[6] Permeation tube option.

APPENDIX A-5: MODBUS Register Map (Note: neither photometer nor perm tube apply to the T700H)

MODBUS Register Address (dec., 0-based)	Description	Units
MODBUS Floating Point Input Registers (32-bit IEEE 754 format; read in high-word, low-word order; read-only)		
0	Actual cal. gas flow rate	LPM
2	Actual diluent flow rate	LPM
4	Photometer measured ozone concentration	PPB
6	Ozone generator reference detector reading	mV
8	Ozone generator flow rate	LPM
10	Ozone generator lamp drive	mV
12	Ozone generator lamp temperature	°C
14	Cal. gas pressure	PSIG
16	Diluent pressure	PSIG
18	Regulator pressure	PSIG
20	Internal box temperature	°C
22	Permeation tube #1 temperature [3]	°C
24	Permeation tube flow rate [3]	LPM
26	Photometer detector measure reading	mV
28	Photometer detector reference reading	mV
30	Photometer sample flow rate	LPM
32	Photometer lamp temperature	°C
34	Photometer sample pressure	Inches Hg
36	Photometer sample temperature	°C
38	Photometer slope computed during zero/span bench calibration	—
40	Photometer offset computed during zero/span bench calibration	PPB
42	Ground reference	mV
44	Precision 4.096 mV reference	mV
46	Permeation tube #2 temperature [1]	°C
48	Ozone Gen Fraction [2]	—

MODBUS Register Address (dec., 0-based)	Description	Units
MODBUS Discrete Input Registers (single-bit; read-only)		
0	System reset warning	
1	Box temperature warning	
2	Photometer lamp temperature warning	
3	O_3 generator lamp temperature warning	
4	Permeation tube #1 temperature warning [3]	
5	Photometer reference warning	
6	Photometer lamp stability warning	
7	O_3 generator reference detector warning	
8	Regulator pressure warning	
9	Any MFC pressure outside of warning limits	
10	Any MFC drive less than 10% of full scale or greater than full scale	
11	Any MFC sensor offset greater than allowable limit	
12	Rear board communication warning	
13	Relay board communication warning	
14	Valve board communication warning	
15	O_3 generator or photometer lamp I^2C driver chip communication warning	
16	Front panel communication warning	
17	Firmware is unable to communicate with any MFC	
18	Analog calibration warning	
19	System is OK (same meaning as *SYSTEM_OK* I/O signal)	
20	O_3 generator not yet stabilized	
21	Permeation tube #2 temperature warning [1]	
MODBUS Coil Registers (single-bit; read/write)		
00-99	Trigger execution of sequence whose name begins with “00” - “99”. Turning a coil on executes a sequence. Turning a coil off does nothing. When reading coils, the value indicates which sequence is executing. If a coil is on, the sequence is executing; if off the sequence is not executing. Supports nested sequences, so multiple sequence coils may be on simultaneously.	
100	Turning coil on turns on purge. Turning coil off does nothing. When reading coil, the value indicates whether purge is active. If on, purge is active; if off, purge is not active. Purge may be invoked within a sequence, so purge coil may be on at the same time as a sequence coil.	
101	Turning coil on puts instrument in standby. Turning coil off does nothing. When reading coil, the value indicates whether instrument is in standby mode. If on, instrument is in standby; if off, instrument is not in standby.	
200-211	Connected to the control outputs (CONTROL_OUT_1– CONTROL_OUT_12). These coils may be turned both on and off. Reading the coils indicates the current state.	

[1] Dual permeation tube option.

[2] Low range option.

[3] Permeation tube option.

APPENDIX A-6: Terminal Command Designators

Table A-5: Terminal Command Designators

COMMAND	ADDITIONAL COMMAND SYNTAX	DESCRIPTION
? [ID]		Display help screen and commands list
LOGON [ID]	password	Establish connection to instrument
LOGOFF [ID]		Terminate connection to instrument
T [ID]	SET ALL|name|hexmask	Display test(s)
	LIST [ALL|name|hexmask] [NAMES|HEX]	Print test(s) to screen
	name	Print single test
	CLEAR ALL|name|hexmask	Disable test(s)
W [ID]	SET ALL|name|hexmask	Display warning(s)
	LIST [ALL|name|hexmask] [NAMES|HEX]	Print warning(s)
	name	Clear single warning
	CLEAR ALL|name|hexmask	Clear warning(s)
C [ID]	ZERO|LOWSPAN|SPAN [1|2]	Enter calibration mode
	ASEQ number	Execute automatic sequence
	COMPUTE ZERO|SPAN	Compute new slope/offset
	EXIT	Exit calibration mode
	ABORT	Abort calibration sequence
D [ID]	LIST	Print all I/O signals
	name[=value]	Examine or set I/O signal
	LIST NAMES	Print names of all diagnostic tests
	ENTER name	Execute diagnostic test
	EXIT	Exit diagnostic test
	RESET [DATA] [CONFIG] [exitcode]	Reset instrument
V [ID]	LIST	Print setup variables
	name[=value [warn_low [warn_high]]]	Modify variable
	name="value"	Modify enumerated variable
	CONFIG	Print instrument configuration
	MAINT ON|OFF	Enter/exit maintenance mode
	MODE	Print current instrument mode

The command syntax follows the command type, separated by a space character. Strings in [brackets] are optional designators. The following key assignments also apply.

Table A-6: Terminal Key Assignments

TERMINAL KEY ASSIGNMENTS	
ESC	Abort line
CR (ENTER)	Execute command
Ctrl-C	Switch to computer mode
COMPUTER MODE KEY ASSIGNMENTS	
LF (line feed)	Execute command
Ctrl-T	Switch to terminal mode

APPENDIX B - Spare Parts

Note **Use of replacement parts other than those supplied by Teledyne Advanced Pollution Instrumentation (TAPI) may result in non-compliance with European standard EN 61010-1.**

Note **Due to the dynamic nature of part numbers, please refer to the TAPI Website at http://www.teledyne-api.com or call Customer Service at 800-324-5190 for more recent updates to part numbers.**

This page intentionally left blank.

T700H Spare Parts List

08063A DCN6717 01/30/2014

Item number	Product name
066970000	PCA, INTRF. LCD TOUCH SCRN, F/P
067420000	BEZEL, T-SERIES(PA)
067900000	LCD MODULE, W/TOUCHSCREEN(PA)
072150000	ASSY. TOUCHSCREEN CONTROL MODULE
040010000	ASSY, FAN REAR PANEL (B/F)
050350000	HINGE, NEW CHASSIS (KB)
058021400	PCA, MTHRBRD, CAL, GEN 5-I (PA)
067240000	CPU, PC-104, VSX-6154E, ICOP *(PA)
067460000	CBL, MTHRBD TO 06154 CPU(KB)
068810000	PCA, LVDS TRANSMITTER BOARD
CN0000073	POWER ENTRY, 120/60 (KB)
FA0000013	FAN, GUARD, 60MM
CP0000034	DOM, 128M,4 4P, KEY-TO-CENTER(KB)*
055270000	ASSY, EXHAUST MANIFOLD, CAL (KB)
055200000	MANIFOLD, EXHAUST, M700E/M703E(KB)
047020000	ASSY, PUMP, PU63, 7" leads
HW0000324	COVER, CAPLUG, 1.25X2.0 VSC 1250-32, BLK (VMI)
048190300	ASSY, RELAY/PS, CAL
045230100	PCA, RELAY CARD(PA)
058960000	LABEL, RELAY BOARD , HI VOLTAGE
067300200	PCA, AUX-I/O BOARD, ETHERNET & USB
067880000	MASK, "T" SERIES, ETHERNET/USB
069390000	COVER, T-SERIES (KB)
048990200	ASSY, OZONE SCRUBBER,
018350001	OZONE GENERATOR MODULE
073060000	PCA, VARIABLE PULSE DRIVER-T700H
039510000	BASE, O3 GENERATOR, M200E(KB)
074050000	ASSY, PRES/FLOW SENSOR (2P)
073210000	PCA, PRES/FLOW Board, 2-P (FREESCALE)
073210100	PCA, PRES/FLOW Board, 1-P (FREESCALE)
058230000	ASSY, O3 CLEANSER, ALUMINUM
074050100	ASSY, PRES/FLOW SENSOR (1P)
001762700	ASSY, FLOW CTL, 60CC, 1/4", BRASS
073700000	ASSY, PRESSURE REGULATOR, 700H (1P)
073700100	ASSY, PRESSURE REGULATOR, 700H (2P)
VA0000059	VALVE, 3-WAY, 12VDC *
075660000	ASSY, ZERO AIR SCRUBBER, 700H
074330000	MASK, REAR PANEL, T700H
076100000	ASSY, INLET MANIFOLD-2MFC, 700H, w/PCA
054690000	PCA, VALVE DRIVER, 700/H
SW0000025	SWITCH/CIR BRK, VDE, CE *(KB)

T700H Spare Parts List

08063A DCN6717 01/30/2014

Item number	Product name
080480000	ASSY, VALVE HF (VA74)
056450000	ASSY, VALVE (VA67) (B/F)
FT0000447	BYPASS PLUG, MANIFOLD MOUNT
043910100	AKIT, EXP KIT, ORANGE SILICA GEL
006900000	RETAINER PAD CHARCOAL, SMALL, 1-3/4"

Appendix C Warranty/Repair Questionnaire T700H (07620C, DCN 6760)	TELEDYNE ADVANCED POLLUTION INSTRUMENTATION Everywhereyoulook™

CUSTOMER: _____ PHONE: _____

CONTACT NAME: _____ FAX NO. _____

SITE ADDRESS: _____

MODEL TYPE: _____ SERIAL NO.: _____ FIRMWARE REVISION: _____

Are there any failure messages? _____

PLEASE COMPLETE THE FOLLOWING TABLE (Depending on options installed, not all test parameters shown will be available in your calibrator):

PARAMETER	RECORDED VALUE	ACCEPTABLE VALUE
A-CAL	LPM	TARG CAL ± 1%
T-CAL	LPM	0.001 – 0.100 LPM
A-CAL2[1]	LPM	TARG CAL1 ± 1%
T-CAL2[1]	LPM	0.001 – 0.100 LPM
A-CAL2[1]	LPM	TARG CAL2 ± 1%
T-CAL2[1]	LPM	0.001 – 0.100 LPM
A-DIL	LPM	TARG DIL ± 1%
T-DIL	LPM	0.01 – 10 LPM
O3FLOW	LPM	0.080 ± 0.025 LPM
O3GENDRV	mV	0 – 5000mV
CAL PRES	PSI	25 – 33PSI
CAL1 PRES[1]	PSI	25 – 33PSI
CAL2 PRES[1]	PSI	25 – 33PSI
DIL PRES	PSI	25 – 33PSI
REG PRES	PSI	8 ± 1PSI (While performing GPT)
A-GAS		T-GAS ± 1%
A-GAS1[1]		T-GAS1 ± 1%
T-GAS		Variable
T-GAS1[1]		Variable
A-GAS2[1]		T-GAS2 ± 1%
T-GAS2[1]		Variable
A-O3		-
T-O3		Variable
T-FLW	LPM	1.0 – 10 SLPM
BOX TMP	°C	AMBIENT ± 5°C

[1]Dual Gas Blending Enabled

TELEDYNE API CUSTOMER SERVICE
Email: sda_techsupport@teledyne.com
PHONE: (858) 657-9800 TOLL FREE: (800) 324-5190 FAX: (858) 657-9816

What is measured O_3 generator flow rate? _____cc/min

What are the failure symptoms? _____

_____

_____

_____

What tests have you done trying to solve the problem? _____

_____

_____

_____

_____

Thank you for providing this information. Your assistance enables Teledyne Instruments to respond faster to the problem that you are encountering.

OTHER NOTES: _____

_____

_____

_____

_____

_____

_____

_____

_____

_____

_____

_____

_____

_____

_____

TELEDYNE API CUSTOMER SERVICE
Email: sda_techsupport@teledyne.com
PHONE: (858) 657-9800 TOLL FREE: (800) 324-5190 FAX: (858) 657-9816

APPENDIX D – Wire List and Electronic Schematics

This page intentionally left blank.

Revision	Description					Checked	Date	DCN	
A	Production Release					RH	8/21/2013	6774	
		CONNECTION FROM				CONNECTION TO			
Cable Part #	Signal	Assembly	PN	J/P	Pin	Assembly	PN	J/P	Pin
036490100	**CBL, AC POWER**								
	AC Line	Power Entry	CN0000073		L	Power Switch	SW0000025		L
	AC Neutral	Power Entry	CN0000073		N	Power Switch	SW0000025		N
	Power Grnd	Power Entry	CN0000073			Shield	SW0000025		
	Power Grnd	Power Entry	CN0000073			Chassis			
	AC Line Switched	Power Switch	SW0000025		L	PS2 (+12)	PS0000039	J1	1
	AC Neutral Switched	Power Switch	SW0000025		N	PS2 (+12)	PS0000039	J1	3
	Power Grnd	Power Entry	CN0000073			PS2 (+12)	PS0000039	J1	2
	AC Line Switched	Power Switch	SW0000025		L	PS1 (+5, ±15)	PS0000037	J1	1
	AC Neutral Switched	Power Switch	SW0000025		N	PS1 (+5, ±15)	PS0000037	J1	3
	Power Grnd	Power Entry	CN0000073			PS1 (+5, ±15)	PS0000037	J1	2
	AC Line Switched	Power Switch	SW0000025		L	Relay Board	045230100	J1	1
	AC Neutral Switched	Power Switch	SW0000025		N	Relay Board	045230100	J1	3
	Power Grnd	Power Entry	CN0000073			Relay Board	045230100	J1	2
038290000	**CBL, DC POWER TO MOTHERBOARD**								
	DGND	Relay Board	045230100	J7	1	Motherboard	058021400	J15	1
	+5V	Relay Board	045230100	J7	2	Motherboard	058021400	J15	2
	AGND	Relay Board	045230100	J7	3	Motherboard	058021400	J15	3
	+15V	Relay Board	045230100	J7	4	Motherboard	058021400	J15	4
	AGND	Relay Board	045230100	J7	5	Motherboard	058021400	J15	5
	-15V	Relay Board	045230100	J7	6	Motherboard	058021400	J15	6
	+12V RET	Relay Board	045230100	J7	7	Motherboard	058021400	J15	7
	+12V	Relay Board	045230100	J7	8	Motherboard	058021400	J15	8
	Chassis Gnd	Relay Board	045230100	J7	10	Motherboard	058021400	J15	9
041050000	**CBL, KEYBOARD TO MOTHERBOARD**								
	Kbd Interupt	LCD Interface Bd	066970000	J1	7	Motherboard	058021400	J106	1
	DGND	LCD Interface Bd	066970000	J1	2	Motherboard	058021400	J106	8
	SDA	LCD Interface Bd	066970000	J1	5	Motherboard	058021400	J106	2
	SCL	LCD Interface Bd	066970000	J1	6	Motherboard	058021400	J106	6
	Shld	LCD Interface Bd	066970000	J1	10	Motherboard	058021400	J106	5
041760100	**CBL, DC POWER, TYPE 2**								
	DGND	Relay Board	045230100	J8	1	PS1 (+5, ±15)	PS0000037	J2	3
	+5V	Relay Board	045230100	J8	2	PS1 (+5, ±15)	PS0000037	J2	1
	+15V	Relay Board	045230100	J8	4	PS1 (+5, ±15)	PS0000037	J2	6
	AGND	Relay Board	045230100	J8	5	PS1 (+5, ±15)	PS0000037	J2	4
	-15V	Relay Board	045230100	J8	6	PS1 (+5, ±15)	PS0000037	J2	5
	+12V RET	Relay Board	045230100	J8	7	PS2 (+12)	PS0000039	J2	5
	+12V	Relay Board	045230100	J8	8	PS2 (+12)	PS0000039	J2	3
046710000	**CBL, MOTHERBOARD TO XMITTER BD (MULTIDROP OPTION)**								
	GND	Motherboard	058021100	P12	2	Xmitter bd w/Multidrop	069500000	J4	2
	RX0	Motherboard	058021100	P12	14	Xmitter bd w/Multidrop	069500000	J4	14
	RTS0	Motherboard	058021100	P12	13	Xmitter bd w/Multidrop	069500000	J4	13
	TX0	Motherboard	058021100	P12	12	Xmitter bd w/Multidrop	069500000	J4	12
	CTS0	Motherboard	058021100	P12	11	Xmitter bd w/Multidrop	069500000	J4	11
	RS-GND0	Motherboard	058021100	P12	10	Xmitter bd w/Multidrop	069500000	J4	10
	RTS1	Motherboard	058021100	P12	8	Xmitter bd w/Multidrop	069500000	J4	8
	CTS1/485-	Motherboard	058021100	P12	6	Xmitter bd w/Multidrop	069500000	J4	6
	RX1	Motherboard	058021100	P12	9	Xmitter bd w/Multidrop	069500000	J4	9
	TX1/485+	Motherboard	058021100	P12	7	Xmitter bd w/Multidrop	069500000	J4	7
	RS-GND1	Motherboard	058021100	P12	5	Xmitter bd w/Multidrop	069500000	J4	5
	RX1	Motherboard	058021100	P12	9	Xmitter bd w/Multidrop	069500000	J4	9
	TX1/485+	Motherboard	058021100	P12	7	Xmitter bd w/Multidrop	069500000	J4	7
	RS-GND1	Motherboard	058021100	P12	5	Xmitter bd w/Multidrop	069500000	J4	5

		CONNECTION FROM				CONNECTION TO			
Cable Part #	Signal	Assembly	PN	J/P	Pin	Assembly	PN	J/P	Pin
051790000	**CBL, POWER & SIGNAL DISTRIBUTION**								
	+12V RET	Relay Board	045230100	J11	7	Fan	040010000		1
	+12V	Relay Board	045230100	J11	8	Fan	040010000		2
	DGND	Relay Board	045230100	J11	1	LCD Interface Bd	066970000	J14	2
	VCC	Relay Board	045230100	J11	2	LCD Interface Bd	066970000	J14	3
	DGND	Relay Board	045230100	J12	1	LCD Interface Bd	066970000	J14	8
	VCC	Relay Board	045230100	J12	2	LCD Interface Bd	066970000	J14	1
	SDA	CAL1	Digital MFC		8	LCD Interface Bd	066970000	J14	5
	SCL	CAL1	Digital MFC		7	LCD Interface Bd	066970000	J14	6
	DGND	CAL1	Digital MFC		6	LCD Interface Bd	066970000	J14	10
	DGND	CAL1	Digital MFC		1	Relay Board	045230100	J9	1
	VCC	CAL1	Digital MFC		3	Relay Board	045230100	J9	2
	AGND	Relay Board	045230100	J12	3	Photo Press/Flo	040030600	J1	3
	+15V	Relay Board	045230100	J12	4	Photo Press/Flo	040030600	J1	6
	CH6	Motherboard	058021400	J109	2	Photo Press/Flo	040030600	J1	4
	CH11	Motherboard	058021400	J110	4	Photo Press/Flo	040030600	J1	5
	CH12	Motherboard	058021400	J110	3	Photo Press/Flo	040030600	J1	2
	CH14	Motherboard	058021400	J110	1	CAL1	Analog MFC		6
	CH13	Motherboard	058021400	J110	2	DIL1	Analog MFC		6
	CH9	Motherboard	058021400	J110	5	CAL2	Analog MFC		6
		Chassis				CAL2	Analog MFC		7
	-15V	Relay Board	045230100	J9	6	CAL2	Analog MFC		9
	+15V	Relay Board	045230100	J9	4	CAL2	Analog MFC		11
	AGND	Relay Board	045230100	J9	3	CAL2	Analog MFC		12
	-15V	Relay Board	045230100	J9	6	DIL1	Analog MFC		9
	+15V	Relay Board	045230100	J9	4	DIL1	Analog MFC		11
	AGND	Relay Board	045230100	J9	5	DIL1	Analog MFC		12
	DAC0V	Motherboard	058021400	J22	5	DIL1	Analog MFC		14
	AGND	Motherboard	058021400	J22	7	DIL1	Analog MFC		5
		Chassis				DIL1	Analog MFC		7
	DAC2V	Motherboard	058021400	J22	3	CAL2	Analog MFC		14
	AGND	Motherboard	058021400	J22	8	CAL2	Analog MFC		5
	DAC1V	CAL1	Analog MFC		14	Motherboard	058021400	J22	4
	AGND	CAL1	Analog MFC		5	Motherboard	058021400	J22	9
		CAL1	Analog MFC		7	Chassis			
	AGND	Relay Board	045230100	J13	5	Gas Flow PCA	040030500	J1	3
	+15V	Relay Board	045230100	J13	4	Gas Flow PCA	040030500	J1	6
	CH3	Motherboard	058021400	J109	4	Gas Flow PCA	040030500	J1	4
	CH4	Motherboard	058021400	J109	3	Gas Flow PCA	040030500	J1	2
054840000	**CBL, VALVE DRIVER & PUMP POWER**								
	+12V	Relay Board	045230100	J4	1	Ref Valve	055220000	1	
	+12V RET	Relay Board	045230100	J4	2	Ref Valve	055220000	2	
	+12V	Relay Board	045230100	J4	5	Pump	047020000	1	
	+12V RET	Relay Board	045230100	J4	6	Pump	047020000	2	

		CONNECTION FROM				CONNECTION TO			
Cable Part #	Signal	Assembly	PN	J/P	Pin	Assembly	PN	J/P	Pin
056310200	**CBL, I2C SIGNAL, T700H**								
	SCL	Motherboard	058021400	J107	3	O3 Gen Pulse Driver Bd	073060000	P3	6
	SDA	Motherboard	058021400	J107	5	O3 Gen Pulse Driver Bd	073060000	P3	2
	Shield	Motherboard	058021400	J107	6	O3 Gen Pulse Driver Bd	073060000	P3	5
	DO3	Motherboard	058021400	J108	15	O3 Gen Pulse Driver Bd	073060000	P2	6
	+15V	O3 Gen Pulse Driver Bd	073060000	P2	4	Relay Board	045230100	J10	4
	AGND	O3 Gen Pulse Driver Bd	073060000	P2	5	Relay Board	045230100	J10	3
	+12VRET	Valve Driver Board	054690000	J1	2	Relay Board	045230100	J10	7
	+12V	Valve Driver Board	054690000	J1	5	Relay Board	045230100	J10	8
	DGND	Valve Driver Board	054690000	J1	1	Relay Board	045230100	J10	1
	VCC	Valve Driver Board	054690000	J1	4	Relay Board	045230100	J10	2
	SCL	Valve Driver Board	054690000	J1	3	Relay Board	045230100	J3	1
	SDA	Valve Driver Board	054690000	J1	6	Relay Board	045230100	J3	2
	SCL	Valve Driver Board	054690000	J1	3	O3 Gen Pulse Driver Bd	073060000	P4	6
	SDA	Valve Driver Board	054690000	J1	6	O3 Gen Pulse Driver Bd	073060000	P4	2
	Shield	Relay Board	045230100	J3	5	O3 Gen Pulse Driver Bd	073060000	P4	5
067370000	**CBL, I2C TO AUX I/O PCA (ANALOG IN OPTION)**								
	ATX-	Motherboard	058021400	J106	1	Aux I/O	067300000	J2	1
	ATX+	Motherboard	058021400	J106	2	Aux I/O	067300000	J2	2
	LED0	Motherboard	058021400	J106	3	Aux I/O	067300000	J2	3
	ARX+	Motherboard	058021400	J106	4	Aux I/O	067300000	J2	4
	ARX-	Motherboard	058021400	J106	5	Aux I/O	067300000	J2	5
	LED0+	Motherboard	058021400	J106	6	Aux I/O	067300000	J2	6
	LED1+	Motherboard	058021400	J106	8	Aux I/O	067300000	J2	8
067380000	**CBL, CPU COM to AUX I/O (USB OPTION)**								
	RXD1	CPU PCA	067240000	COM1	1	AUX I/O PCA	0673000 or -02	J3	1
	DCD1	CPU PCA	067240000	COM1	2	AUX I/O PCA	0673000 or -02	J3	2
	DTR1	CPU PCA	067240000	COM1	3	AUX I/O PCA	0673000 or -02	J3	3
	TXD1	CPU PCA	067240000	COM1	4	AUX I/O PCA	0673000 or -02	J3	4
	DSR1	CPU PCA	067240000	COM1	5	AUX I/O PCA	0673000 or -02	J3	5
	GND	CPU PCA	067240000	COM1	6	AUX I/O PCA	0673000 or -02	J3	6
	CTS1	CPU PCA	067240000	COM1	7	AUX I/O PCA	0673000 or -02	J3	7
	RTS1	CPU PCA	067240000	COM1	8	AUX I/O PCA	0673000 or -02	J3	8
	RI1	CPU PCA	067240000	COM1	10	AUX I/O PCA	0673000 or -02	J3	10
067380000	**CBL, CPU COM to AUX I/O (MULTIDROP OPTION)**								
	RXD	CPU PCA	067240000	COM1	1	Xmitter bd w/Multidrop	069500000	J3	1
	DCD	CPU PCA	067240000	COM1	2	Xmitter bd w/Multidrop	069500000	J3	2
	DTR	CPU PCA	067240000	COM1	3	Xmitter bd w/Multidrop	069500000	J3	3
	TXD	CPU PCA	067240000	COM1	4	Xmitter bd w/Multidrop	069500000	J3	4
	DSR	CPU PCA	067240000	COM1	5	Xmitter bd w/Multidrop	069500000	J3	5
	GND	CPU PCA	067240000	COM1	6	Xmitter bd w/Multidrop	069500000	J3	6
	CTS	CPU PCA	067240000	COM1	7	Xmitter bd w/Multidrop	069500000	J3	7
	RTS	CPU PCA	067240000	COM1	8	Xmitter bd w/Multidrop	069500000	J3	8
	RI	CPU PCA	067240000	COM1	10	Xmitter bd w/Multidrop	069500000	J3	10
067390000	**CBL, CPU ETHERNET TO AUX I/O**								
	ATX-	CPU PCA	067240000	LAN	1	Aux I/O	067300100	J2	1
	ATX+	CPU PCA	067240000	LAN	2	Aux I/O	067300100	J2	2
	LED0	CPU PCA	067240000	LAN	3	Aux I/O	067300100	J2	3
	ARX+	CPU PCA	067240000	LAN	4	Aux I/O	067300100	J2	4
	ARX-	CPU PCA	067240000	LAN	5	Aux I/O	067300100	J2	5
	LED0+	CPU PCA	067240000	LAN	6	Aux I/O	067300100	J2	6
	LED1	CPU PCA	067240000	LAN	7	Aux I/O	067300100	J2	7
	LED1+	CPU PCA	067240000	LAN	8	Aux I/O	067300100	J2	8
067410000	**CBL, CPU USB TO LCD INTERFACE PCA**								
	GND	CPU PCA	067240000	USB	8	LCD Interface PCA	066970000	JP9	
	LUSBD3+	CPU PCA	067240000	USB	6	LCD Interface PCA	066970000	JP9	
	LUSBD3-	CPU PCA	067240000	USB	4	LCD Interface PCA	066970000	JP9	
	VCC	CPU PCA	067240000	USB	2	LCD Interface PCA	066970000	JP9	

		CONNECTION FROM				CONNECTION TO			
Cable Part #	Signal	Assembly	PN	J/P	Pin	Assembly	PN	J/P	Pin
06746	**CBL, MOTHERBOAD TO CPU**								
	RXD(0)	CPU PCA	067240000	COM1	1	Motherboard	058021400	J12	14
	RTS(0)	CPU PCA	067240000	COM1	8	Motherboard	058021400	J12	13
	TXD(0)	CPU PCA	067240000	COM1	4	Motherboard	058021400	J12	12
	CTS(0)	CPU PCA	067240000	COM1	7	Motherboard	058021400	J12	11
	GND(0)	CPU PCA	067240000	COM1	6	Motherboard	058021400	J12	10
	RXD(1)	CPU PCA	067240000	COM2	1	Motherboard	058021400	J12	9
	RTS(1)	CPU PCA	067240000	COM2	8	Motherboard	058021400	J12	8
	TXD(1)	CPU PCA	067240000	COM2	4	Motherboard	058021400	J12	7
	CTS(1)	CPU PCA	067240000	COM2	7	Motherboard	058021400	J12	6
	GND(1)	CPU PCA	067240000	COM2	6	Motherboard	058021400	J12	5
	485+	CPU PCA	067240000	CN5	1	Motherboard	058021400	J12	9
	485-	CPU PCA	067240000	CN5	2	Motherboard	058021400	J12	7
	GND	CPU PCA	067240000	CN5	3	Motherboard	058021400	J12	5
	Shield					Motherboard	058021400	J12	2
WR256	**CBL, XMITTER TO INTERFACE**								
		LCD Interface	066970000	J15		Transmitter Board	068810000	J1	

REVISIONS				
REV	DESCRIPTION	DATE	DCN	APPROVED
A	INITIAL RELEASE	8/21/13	6774	RH

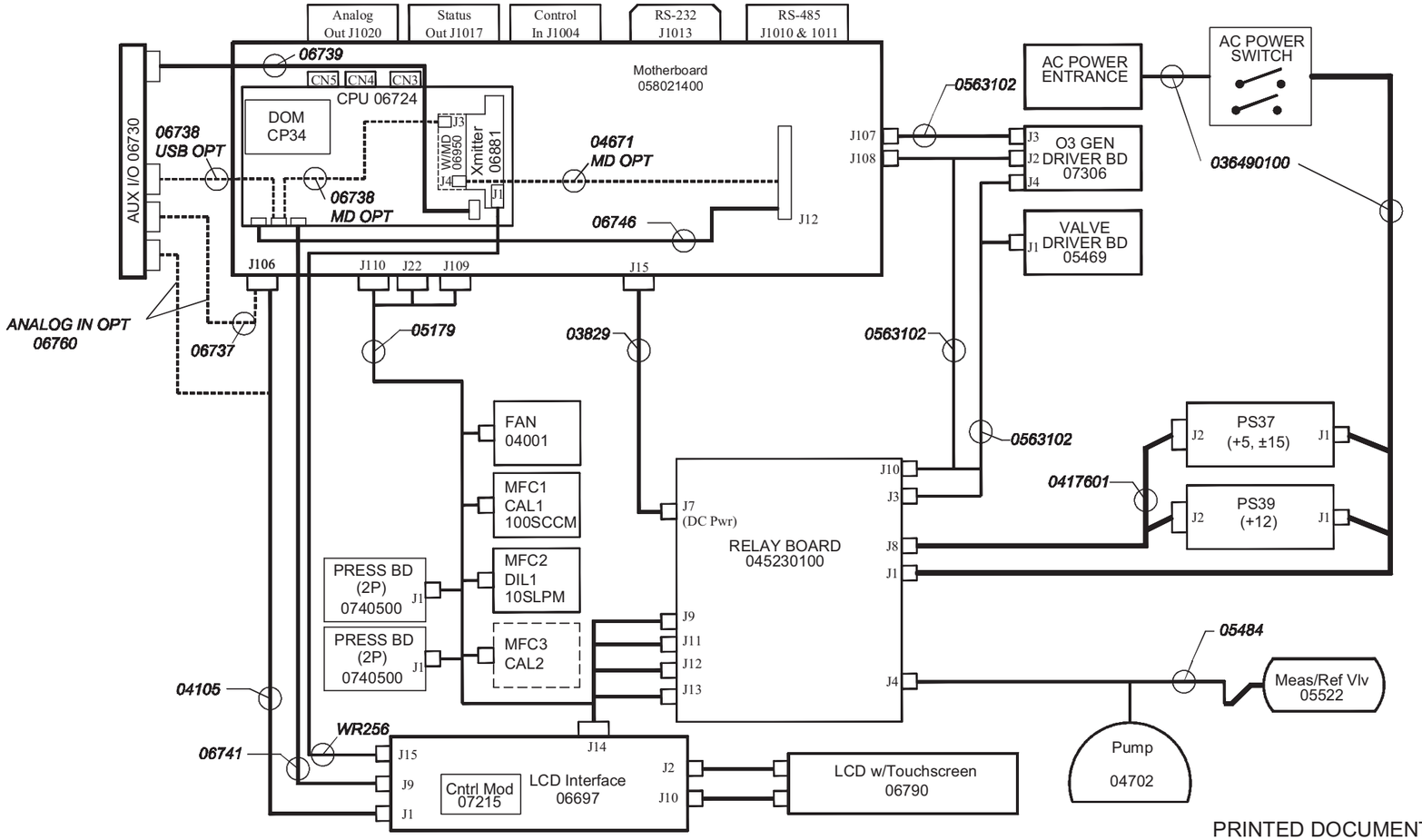

KEY:
1. All part numbers in ***Italic*** identify cables that are refered to in the accompanying document 069140100.
2. All items in Dashed boxes are optional.

PRINTED DOCUMENTS ARE UNCONTROLLED

The information hereon is the property of API and is submitted in strictest confidence for reference only. Unauthorized use by anyone for any other purposes is prohibited. this document or an information contained in it may not be duplicated without proper authorization.

UNLESS OTHERWISE SPECIFIED DIMENSIONS ARE IN INCHES
TOLERANCES ARE:
FRACTIONS ± 1/32 DECIMALS ±.03[0.76] ±.010[0.25] ANGULAR ±0° 30'
DO NOT SCALE DRAWING
TREATMENT: NA
FINISH:
SIMILAR TO:
THIRD ANGLE PROJECTION

CONTRACT: NA

APPROVALS	DATE
DRAWN KV	5/10
CHECK	
CCB	
ISSUED	

TELEDYNE
Advanced Pollution Instrumentation
A Teledyne Technologies Company

TITLE: INTERCONNECT DRAWING T700H

SIZE	CAGE CODE NO.	DWG. NO.	REV
B	1JZF4	07961	A

SCALE 1/1 FILE 07961 SHEET 1 OF 1

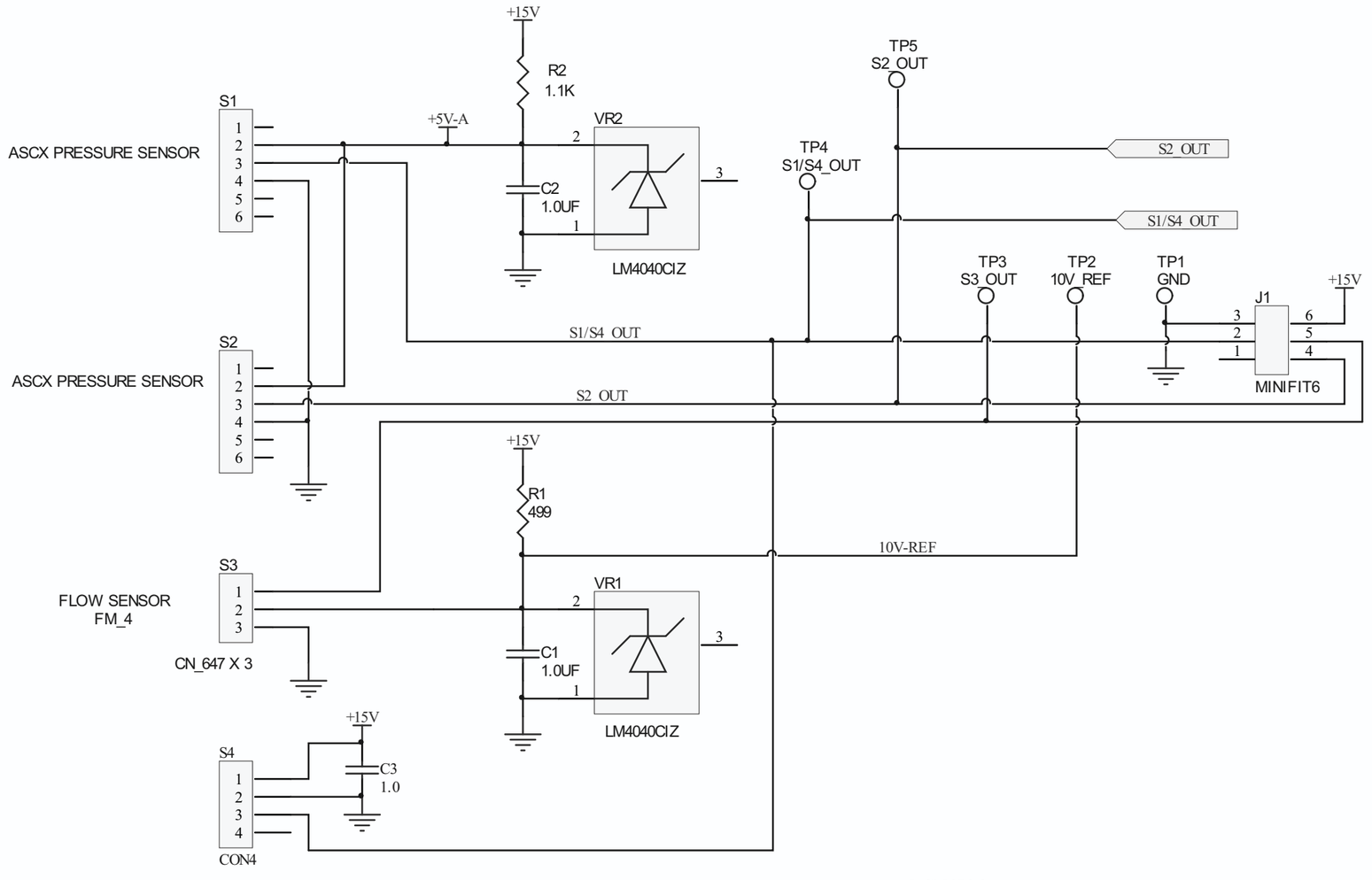

DCN6796
Printed documents are uncontrolled

Teledyne API	9480 Carroll Park Drive, San Diego, CA 92121-5201		
Title	SCH, FREESCALE-PRESS/FLOW, 'E' SERIES		
Size: A	Number: 07322	Revision: A	
Date: 11/6/2013		Sheet 1 of 2	
File: N:\PCBMGR\..\07322A-1.schDoc		Drawn By: RT	

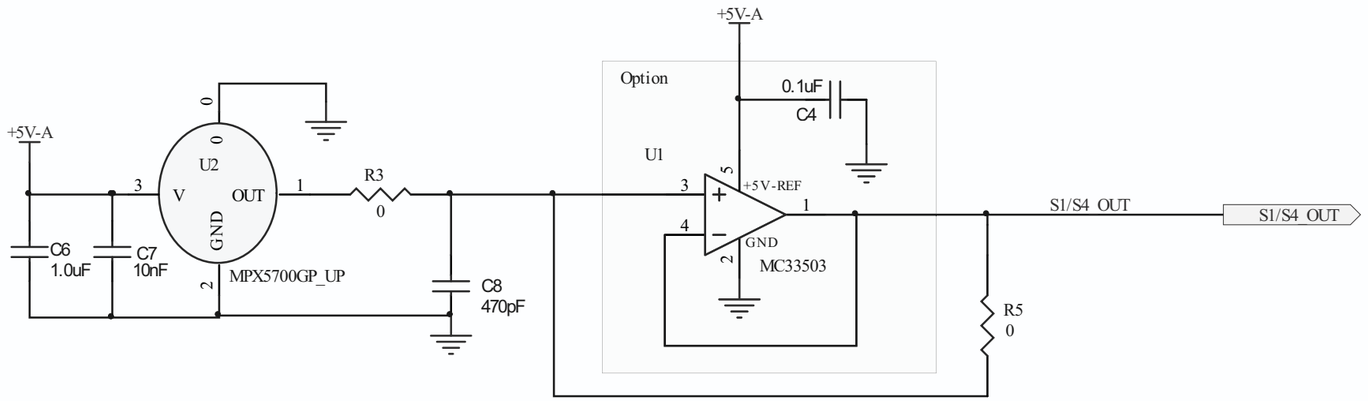

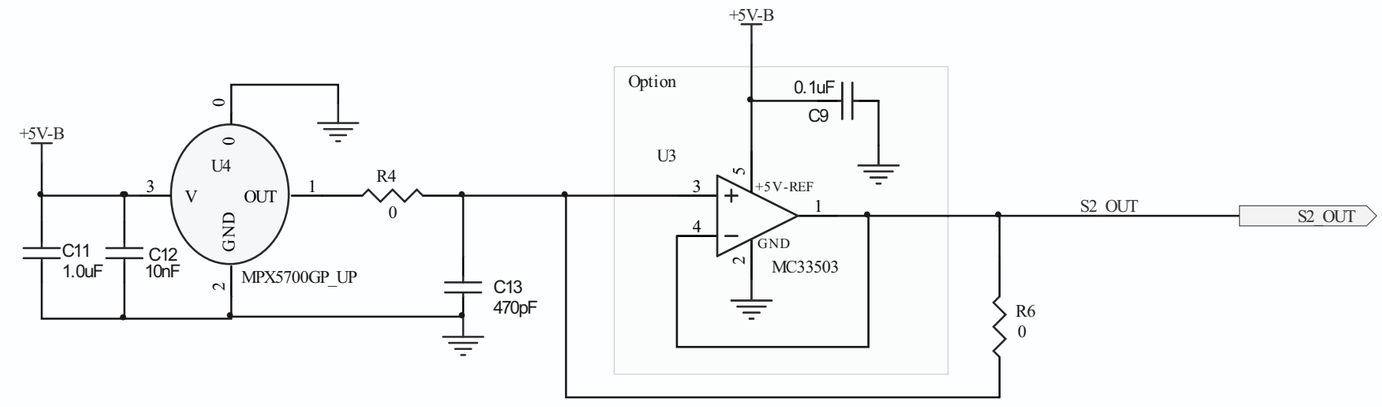

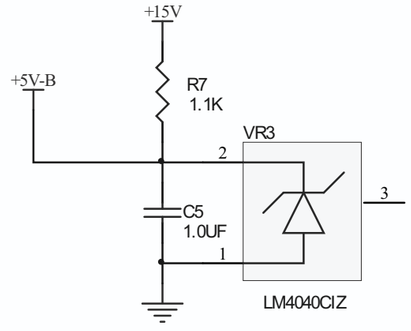

DCN6796

Printed documents are uncontrolled

Teledyne API	9480 Carroll Park Drive, San Diego, CA 92121-5201	
Title: SCH, FREESCALE-PRESS/FLOW, 'E' SERIES		
Size: A	Number: 07322	Revision: A
Date: 11/6/2013		Sheet 2 of 2
File: N:\PCBMGR\..\07322A-2.schDoc		Drawn By: RT

General Trace Width Requirements
1. Vcc (+5V) and I2C VCC should be 15 mil
2. Digitial grounds should be at least 20 mils
3. +12V and +12V return should be 30 mils
4. All AC lines (AC Line, AC Neutral, RELAY0 - 4, All signals on JP2) should be 30 mils wide, with 120 mil isolation/creepage distance around them
5. Traces between J7 - J12 should be top and bottom and at least 140 mils.
6. Traces to the test points can be as small as 10 mils.

find low ESR electroytic

REV	AUTH	DATE	
B	CAC	10/3/02	CE MARK LINE VOLTAGE TRACE SPACING FIX
D	RJ	5/16/07	Add alternate thermocouple connectors
E	RT	02/15/11	Add C20, C21, C22, TP10, TP11, TP12

Title: Teledyne API		
Size: B	Number: 04524	Revision: E
Date: 7/11/2011	Sheet 1 of 3	
File: N:\PCBMGR\...\04524-E_p1.schDoc	Drawn By:	

DCN:6161
Printed documents are uncontrolled

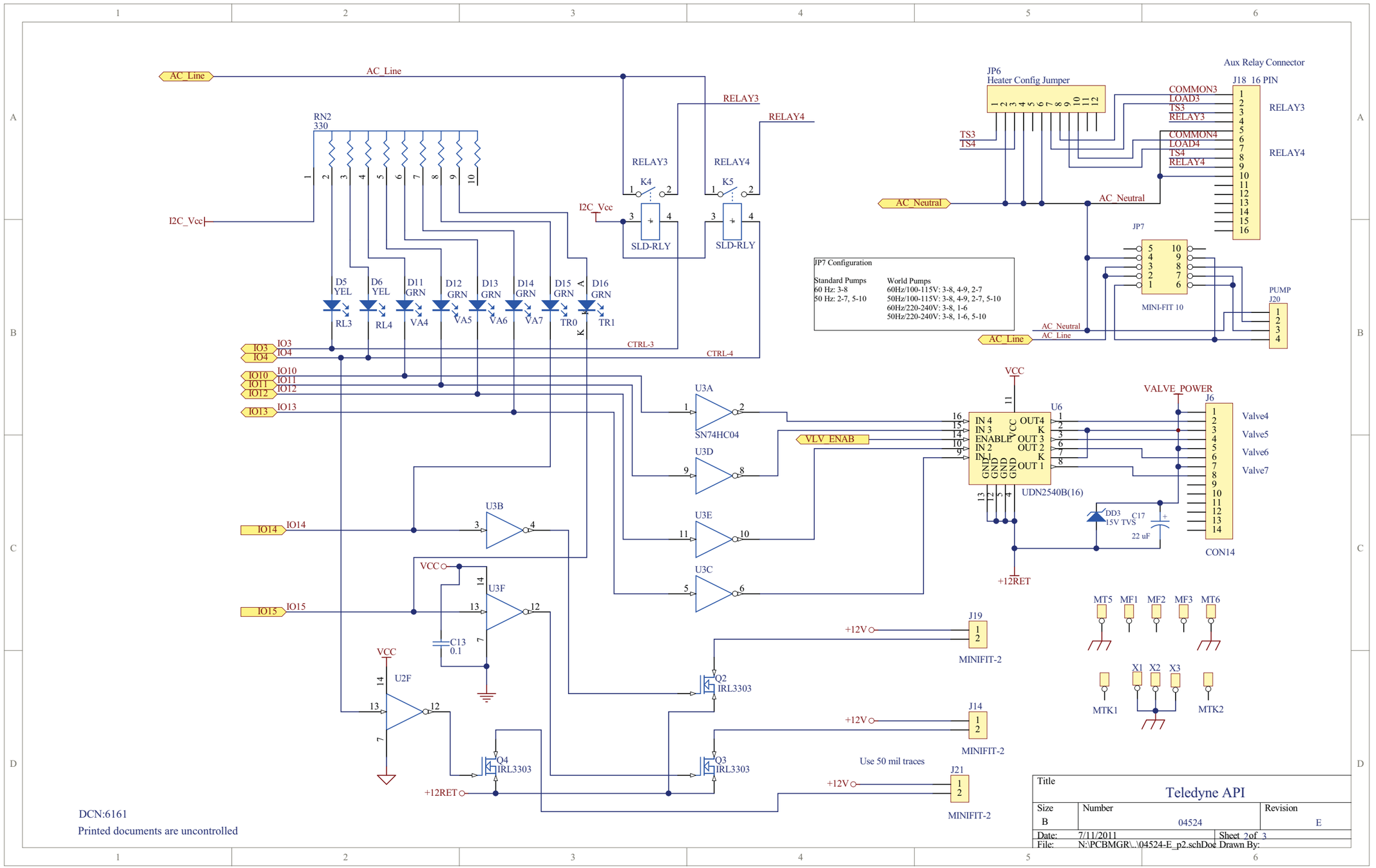
AC_Line
AC_Line
RN2
330
I2C_Vcc
RELAY3
RELAY4
K4
K5
SLD-RLY
SLD-RLY
D5 YEL
D6 YEL
D11 GRN
D12 GRN
D13 GRN
D14 GRN
D15 GRN
D16 GRN
RL3
RL4
VA4
VA5
VA6
VA7
TR0
TR1
CTRL-3
CTRL-4
IO3
IO4
IO10
IO11
IO12
IO13
IO14
IO15
U3A
SN74HC04
U3D
U3E
U3C
U3B
U3F
U2F
C13
0.1
Q2
IRL3303
Q4
IRL3303
Q3
IRL3303
+12RET
JP6
Heater Config Jumper
TS3
TS4
AC_Neutral
Aux Relay Connector
J18 16 PIN
COMMON3
LOAD3
TS3
RELAY3
COMMON4
LOAD4
TS4
RELAY4
JP7
MINI-FIT 10
PUMP
J20
JP7 Configuration
Standard Pumps
60 Hz: 3-8
50 Hz: 2-7, 5-10
World Pumps
60Hz/100-115V: 3-8, 4-9, 2-7
50Hz/100-115V: 3-8, 4-9, 2-7, 5-10
60Hz/220-240V: 3-8, 1-6
50Hz/220-240V: 3-8, 1-6, 5-10
AC_Neutral
AC_Line
VCC
VLV_ENAB
U6
UDN2540B(16)
VALVE_POWER
J6
Valve4
Valve5
Valve6
Valve7
CON14
DD3
15V TVS
C17
22 uF
J19
J14
J21
MINIFIT-2
+12V
Use 50 mil traces
MT5
MF1
MF2
MF3
MT6
MTK1
MTK2
X1
X2
X3
DCN:6161
Printed documents are uncontrolled
Title
Teledyne API
Size
B
Number
04524
Revision
E
Date:
7/11/2011
Sheet 2of 3
File:
N:\PCBMGR\...\04524-E_p2.schDoc
Drawn By:

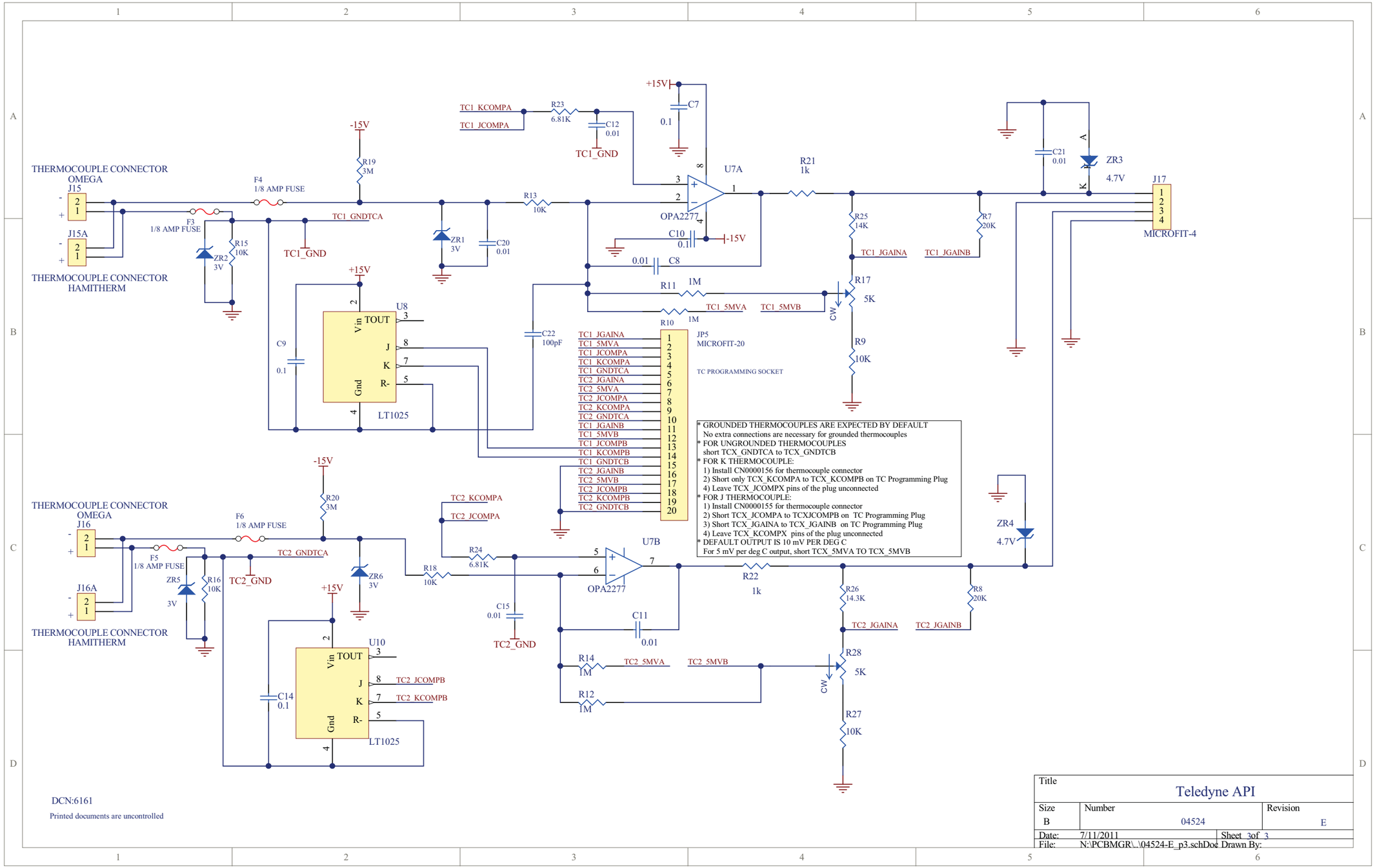
THERMOCOUPLE CONNECTOR
OMEGA
J15
J15A
THERMOCOUPLE CONNECTOR
HAMITHERM
F3
1/8 AMP FUSE
F4
1/8 AMP FUSE
ZR2
3V
R15
10K
TC1_GNDTCA
TC1_GND
-15V
R19
3M
ZR1
3V
C20
0.01
R13
10K
TC1_KCOMPA
TC1_JCOMPA
R23
6.81K
C12
0.01
TC1_GND
+15V
C7
0.1
U7A
OPA2277
R21
1k
C10
0.1
-15V
0.01
C8
R25
14K
R7
20K
C21
0.01
ZR3
4.7V
J17
MICROFIT-4
TC1_JGAINA
TC1_JGAINB
R11
1M
TC1_5MVA
TC1_5MVB
1M
R17
5K
CW
R9
10K
+15V
U8
LT1025
Vin
TOUT
J
K
R-
Gnd
C9
0.1
C22
100pF
R10
JP5
MICROFIT-20
TC PROGRAMMING SOCKET
TC1_JGAINA
TC1_5MVA
TC1_JCOMPA
TC1_KCOMPA
TC1_GNDTCA
TC2_JGAINA
TC2_5MVA
TC2_JCOMPA
TC2_KCOMPA
TC2_GNDTCA
TC1_JGAINB
TC1_5MVB
TC1_JCOMPB
TC1_KCOMPB
TC1_GNDTCB
TC2_JGAINB
TC2_5MVB
TC2_JCOMPB
TC2_KCOMPB
TC2_GNDTCB
* GROUNDED THERMOCOUPLES ARE EXPECTED BY DEFAULT
No extra connections are necessary for grounded thermocouples
* FOR UNGROUNDED THERMOCOUPLES
short TCX_GNDTCA to TCX_GNDTCB
* FOR K THERMOCOUPLE:
1) Install CN0000156 for thermocouple connector
2) Short only TCX_KCOMPA to TCX_KCOMPB on TC Programming Plug
4) Leave TCX_JCOMPX pins of the plug unconnected
* FOR J THERMOCOUPLE:
1) Install CN0000155 for thermocouple connector
2) Short TCX_JCOMPA to TCXJCOMPB on TC Programming Plug
3) Short TCX_JGAINA to TCX_JGAINB on TC Programming Plug
4) Leave TCX_KCOMPX pins of the plug unconnected
* DEFAULT OUTPUT IS 10 mV PER DEG C
For 5 mV per deg C output, short TCX_5MVA TO TCX_5MVB
THERMOCOUPLE CONNECTOR
OMEGA
J16
J16A
THERMOCOUPLE CONNECTOR
HAMITHERM
F5
1/8 AMP FUSE
F6
1/8 AMP FUSE
ZR5
3V
R16
10K
TC2_GNDTCA
TC2_GND
-15V
R20
3M
ZR6
3V
R18
10K
TC2_KCOMPA
TC2_JCOMPA
R24
6.81K
C15
0.01
TC2_GND
+15V
U10
LT1025
Vin
TOUT
J
K
R-
Gnd
C14
0.1
U7B
OPA2277
R22
1k
C11
0.01
R14
1M
TC2_5MVA
TC2_5MVB
R12
1M
R26
14.3K
R8
20K
TC2_JGAINA
TC2_JGAINB
R28
5K
CW
R27
10K
ZR4
4.7V
DCN:6161
Printed documents are uncontrolled
Title
Teledyne API
Size
B
Number
04524
Revision
E
Date:
7/11/2011
Sheet 3 of 3
File:
N:\PCBMGR\...\04524-E_p3.schDoc
Drawn By:

Leads 05696b-1.Sch
Leads 05696b-1.Sch

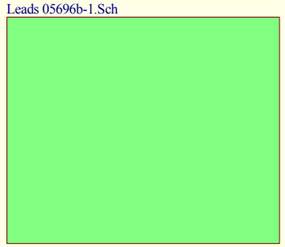

Leads 05696b-2.Sch
Leads 05696b-2.Sch

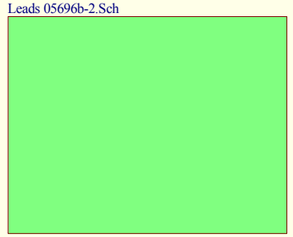

Printed Documents Are Uncontrolled

Title	SCH, External Valve Interface PCA 05697		
Size	Number		Revision
B	05698		B
Date:	8-Dec-2006	Sheet	0 of 3
File:	N:\PCBMGR\05696.leads.rear.panel.adapter\Drawing\05696.ddb	Drawn By:	

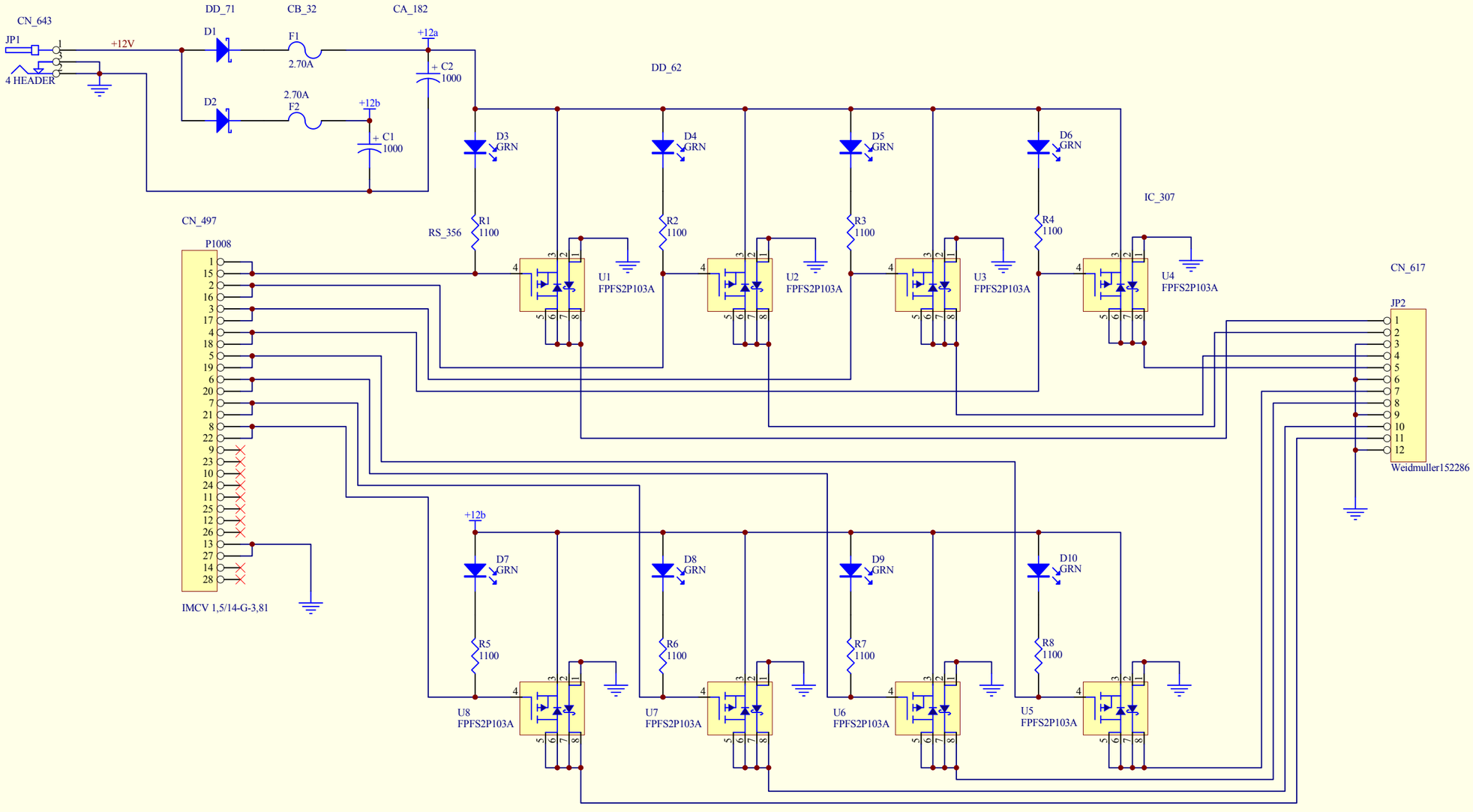

DCN 4295

Title: SCH, External Valve Interface PCA 05697		
Size: B	Number: 05698	Revision: B
Date: 8-Dec-2006	Sheet 1 of 2	
File: N:\PCBMGR\05696.leads.rear.panel.adapter\Prod\05696.ddb	Drawn By:	

Printed Documents Are Uncontrolled

P1020 mates with positions 7 & 8 of J1020 on motherboard

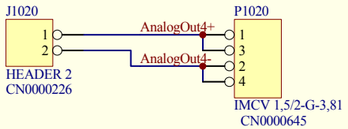

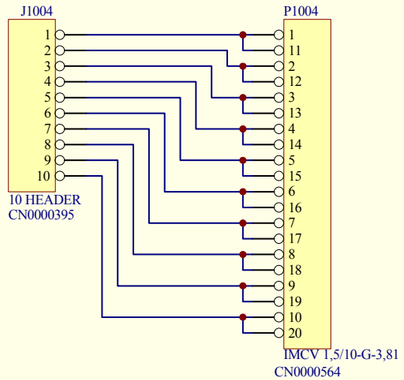

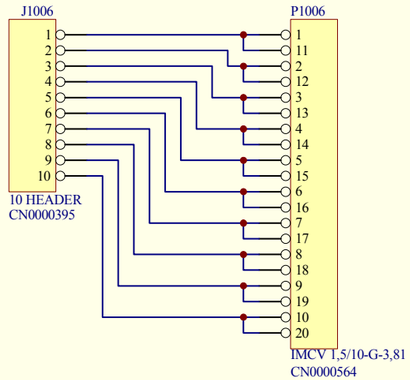

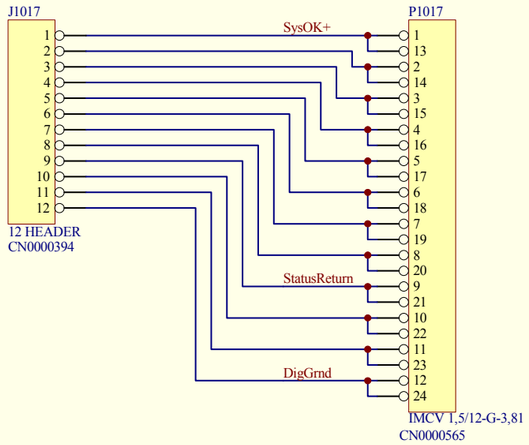

DCN 4295

Title: SCH, External Valve Interface PCA 05697		
Size: B	Number: 05698	Revision: B
Date: 8-Dec-2006	Sheet 2 of 2	
File: N:\PCBMGR\05696.leads.rear.panel.adapter\Prod\05696.ddb	Drawn By:	

Printed Documents Are Uncontrolled

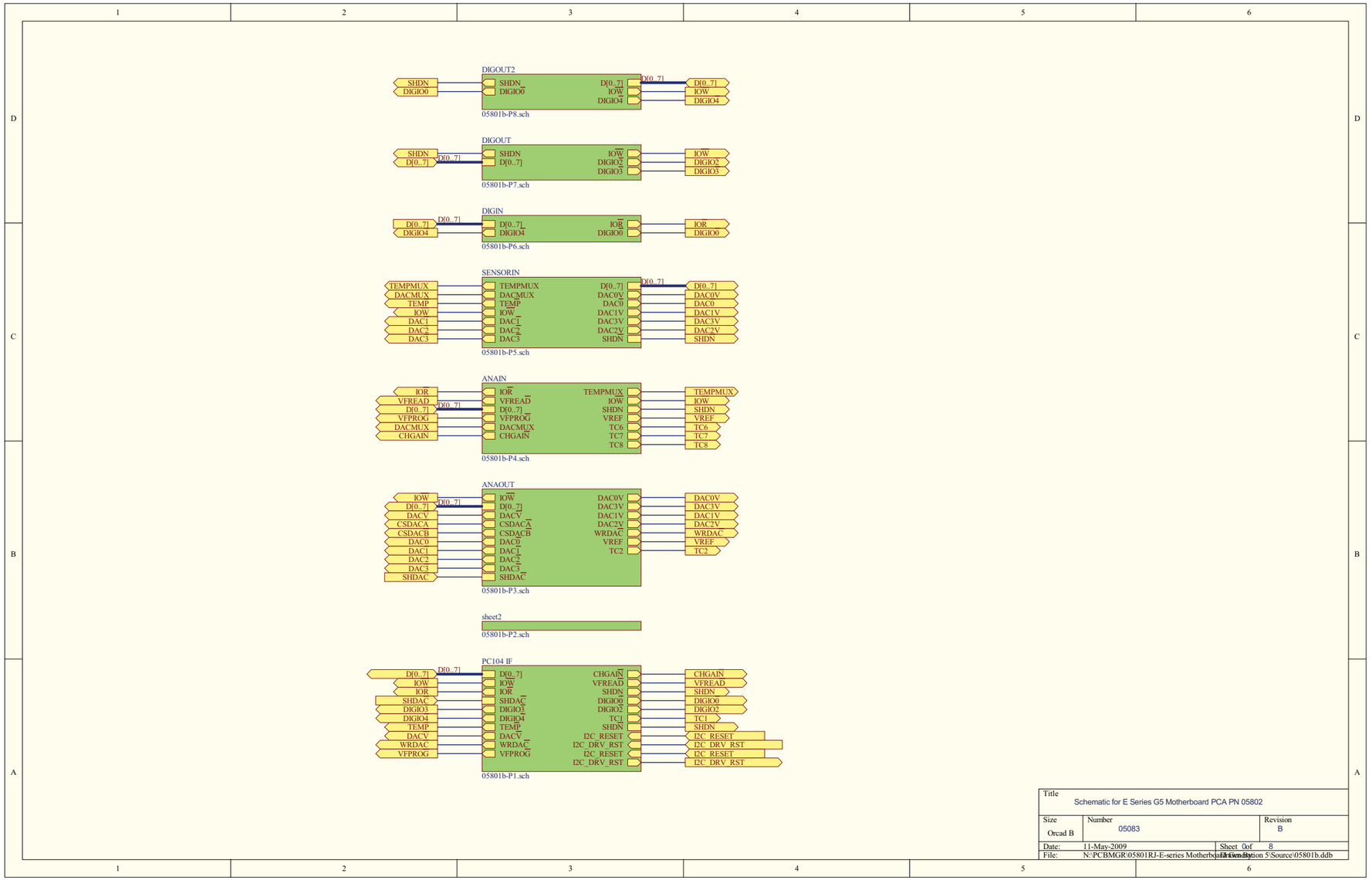
DIGOUT2
SHDN
DIGIO0
SHDN_
DIGIO0
D[0..7]
IOW
DIGIO4
D[0..7]
IOW
DIGIO4
05801b-P8.sch
DIGOUT
SHDN
D[0..7]
SHDN
D[0..7]
IOW
DIGIO2
DIGIO3
IOW
DIGIO2
DIGIO3
05801b-P7.sch
DIGIN
D[0..7]
DIGIO4
D[0..7]
DIGIO4
IOR
DIGIO0
IOR
DIGIO0
05801b-P6.sch
SENSORIN
TEMPMUX
DACMUX
TEMP
IOW
DAC1
DAC2
DAC3
TEMPMUX
DACMUX
TEMP
IOW
DAC1
DAC2
DAC3
D[0..7]
DAC0V
DAC0
DAC1V
DAC3V
DAC2V
SHDN
D[0..7]
DAC0V
DAC0
DAC1V
DAC3V
DAC2V
SHDN
05801b-P5.sch
ANAIN
IOR
VFREAD
D[0..7]
VFPROG
DACMUX
CHGAIN
IOR
VFREAD
D[0..7]
VFPROG
DACMUX
CHGAIN
TEMPMUX
IOW
SHDN
VREF
TC6
TC7
TC8
TEMPMUX
IOW
SHDN
VREF
TC6
TC7
TC8
05801b-P4.sch
ANAOUT
IOW
D[0..7]
DACV
CSDACA
CSDACB
DAC0
DAC1
DAC2
DAC3
SHDAC
IOW
D[0..7]
DACV
CSDACA
CSDACB
DAC0
DAC1
DAC2
DAC3
SHDAC
DAC0V
DAC3V
DAC1V
DAC2V
WRDAC
VREF
TC2
DAC0V
DAC3V
DAC1V
DAC2V
WRDAC
VREF
TC2
05801b-P3.sch
sheet2
05801b-P2.sch
PC104 IF
D[0..7]
IOW
IOR
SHDAC
DIGIO3
DIGIO4
TEMP
DACV
WRDAC
VFPROG
D[0..7]
IOW
IOR
SHDAC
DIGIO3
DIGIO4
TEMP
DACV
WRDAC
VFPROG
CHGAIN
VFREAD
SHDN
DIGIO0
DIGIO2
TC1
SHDN
I2C_RESET
I2C_DRV_RST
I2C_RESET
I2C_DRV_RST
CHGAIN
VFREAD
SHDN
DIGIO0
DIGIO2
TC1
SHDN
I2C_RESET
I2C_DRV_RST
I2C_RESET
I2C_DRV_RST
05801b-P1.sch
Title
Schematic for E Series G5 Motherboard PCA PN 05802
Size
Orcad B
Number
05083
Revision
B
Date:
11-May-2009
Sheet 0of 8
File:
N:\PCBMGR\05801RJ-E-series Motherboard\Revision 5\Source\05801b.ddb
Drawn By:

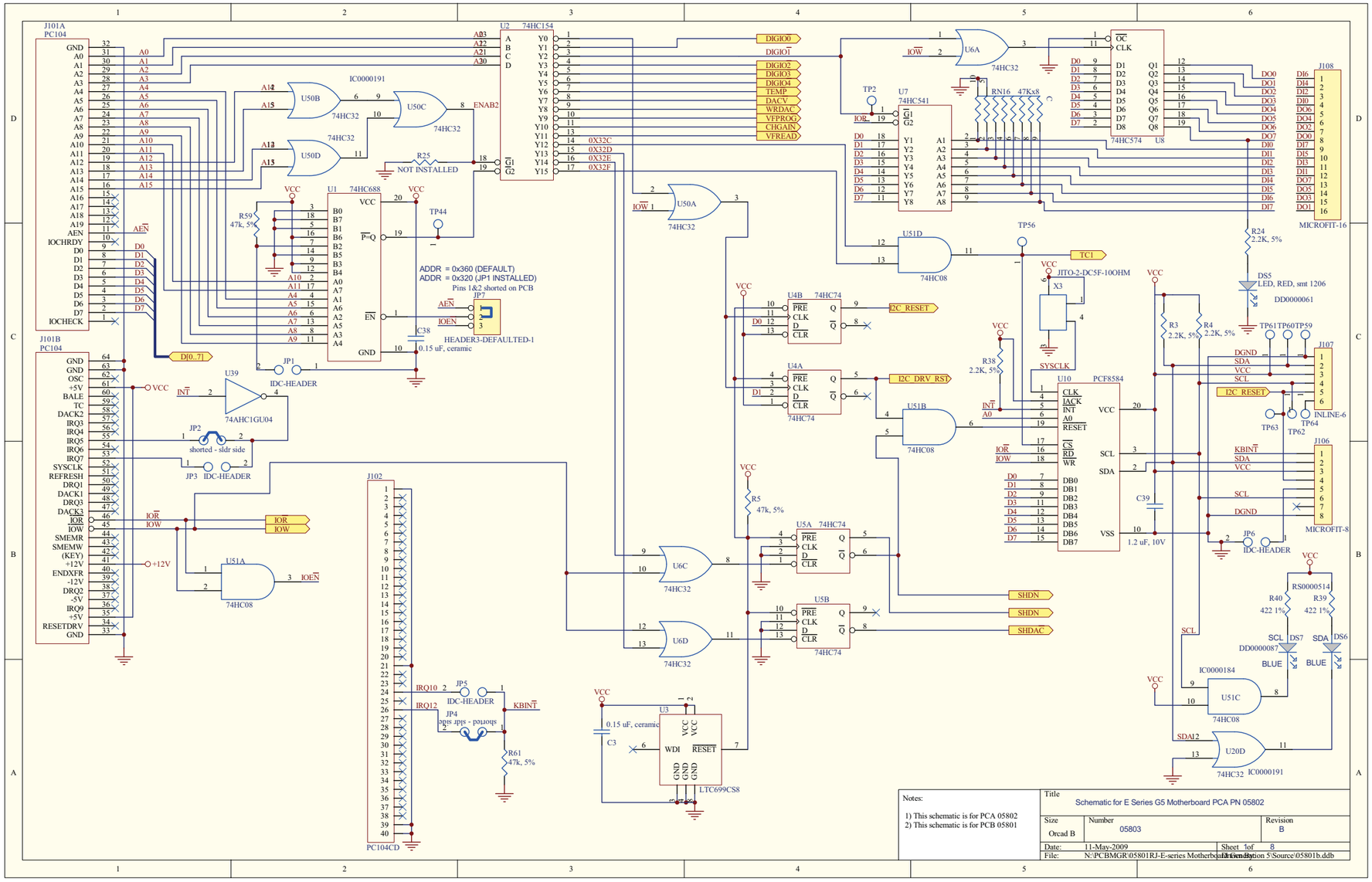

J101A
PC104
J101B
PC104
U2 74HC154
U1 74HC688
U50B 74HC32
U50C 74HC32
U50D 74HC32
U50A 74HC32
U6A 74HC32
U7 74HC541
U8 74HC574
U51D 74HC08
U4B 74HC74
U4A 74HC74
U51B 74HC08
U10 PCF8584
U5A 74HC74
U5B 74HC74
U6C 74HC32
U6D 74HC32
U51A 74HC08
U51C 74HC08
U20D 74HC32
U39 74AHC1GU04
U3 LTC699CS8
J102
PC104CD
J108
MICROFIT-16
J107
INLINE-6
J106
MICROFIT-8
ADDR = 0x360 (DEFAULT)
ADDR = 0x320 (JP1 INSTALLED)
Pins 1&2 shorted on PCB
HEADER3-DEFAULTED-1
IDC-HEADER
shorted - sldr side
NOT INSTALLED
0.15 uF, ceramic
1.2 uF, 10V
JITO-2-DC5F-10OHM
LED, RED, smt 1206
DD0000061
DD0000087
RS0000514
IC0000191
IC0000184
Notes:
1) This schematic is for PCA 05802
2) This schematic is for PCB 05801
Title
Schematic for E Series G5 Motherboard PCA PN 05802
Size
Orcad B
Number
05803
Revision
B
Date: 11-May-2009
Sheet 1 of 8
File: N:\PCBMGR\05801RJ-E-series Motherboard Generation 5\Source\05801b.ddb

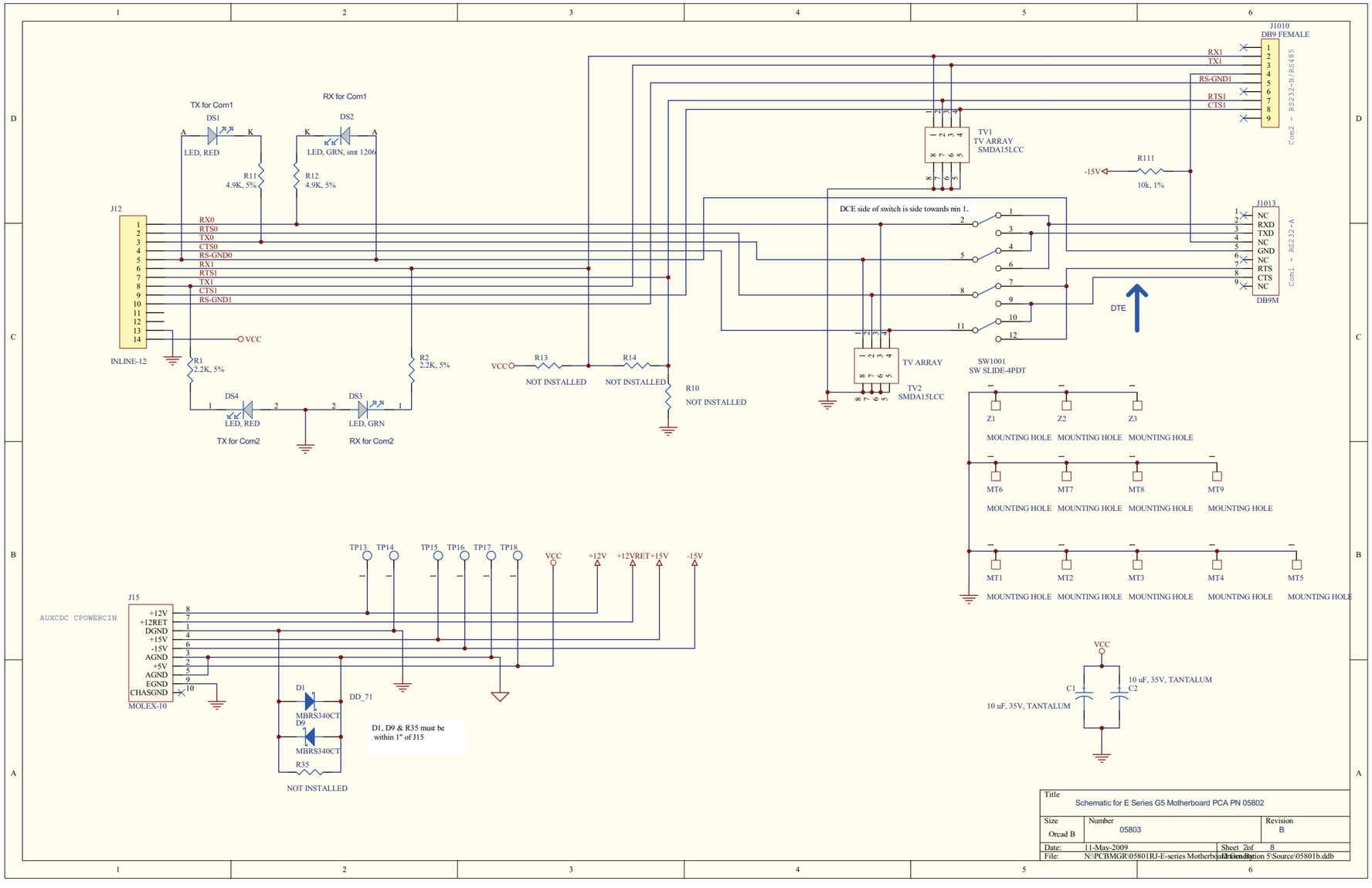
J1010
DB9 FEMALE
RX1
TX1
RS-GND1
RTS1
CTS1
Com2 - RS232-B/RS485
TV1
TV ARRAY
SMDA15LCC
R111
-15V
10k, 1%
J1013
NC
RXD
TXD
NC
GND
NC
RTS
CTS
NC
Com1 - RS232-A
DB9M
DCE side of switch is side towards pin 1.
DTE
TX for Com1
DS1
LED, RED
R11
4.9K, 5%
RX for Com1
DS2
LED, GRN, smt 1206
R12
4.9K, 5%
J12
RX0
RTS0
TX0
CTS0
RS-GND0
RX1
RTS1
TX1
CTS1
RS-GND1
VCC
INLINE-12
R1
2.2K, 5%
R2
2.2K, 5%
DS4
LED, RED
TX for Com2
DS3
LED, GRN
RX for Com2
R13
NOT INSTALLED
R14
NOT INSTALLED
R10
NOT INSTALLED
TV ARRAY
TV2
SMDA15LCC
SW1001
SW SLIDE-4PDT
Z1
Z2
Z3
MOUNTING HOLE
MT6
MT7
MT8
MT9
MT1
MT2
MT3
MT4
MT5
TP13
TP14
TP15
TP16
TP17
TP18
VCC
+12V
+12VRET
+15V
-15V
J15
AUXCDC CPOWERCIN
+12V
+12RET
DGND
+15V
-15V
AGND
+5V
AGND
EGND
CHASGND
MOLEX-10
D1
MBRS340CT
DD_71
D9
MBRS340CT
R35
NOT INSTALLED
D1, D9 & R35 must be within 1" of J15
C1
C2
10 uF, 35V, TANTALUM
Title
Schematic for E Series G5 Motherboard PCA PN 05802
Size
Orcad B
Number
05803
Revision
B
Date:
11-May-2009
Sheet 2 of 8
File:
N:\PCBMGR\05801RJ-E-series Motherboard Revision 5\Source\05801b.ddb

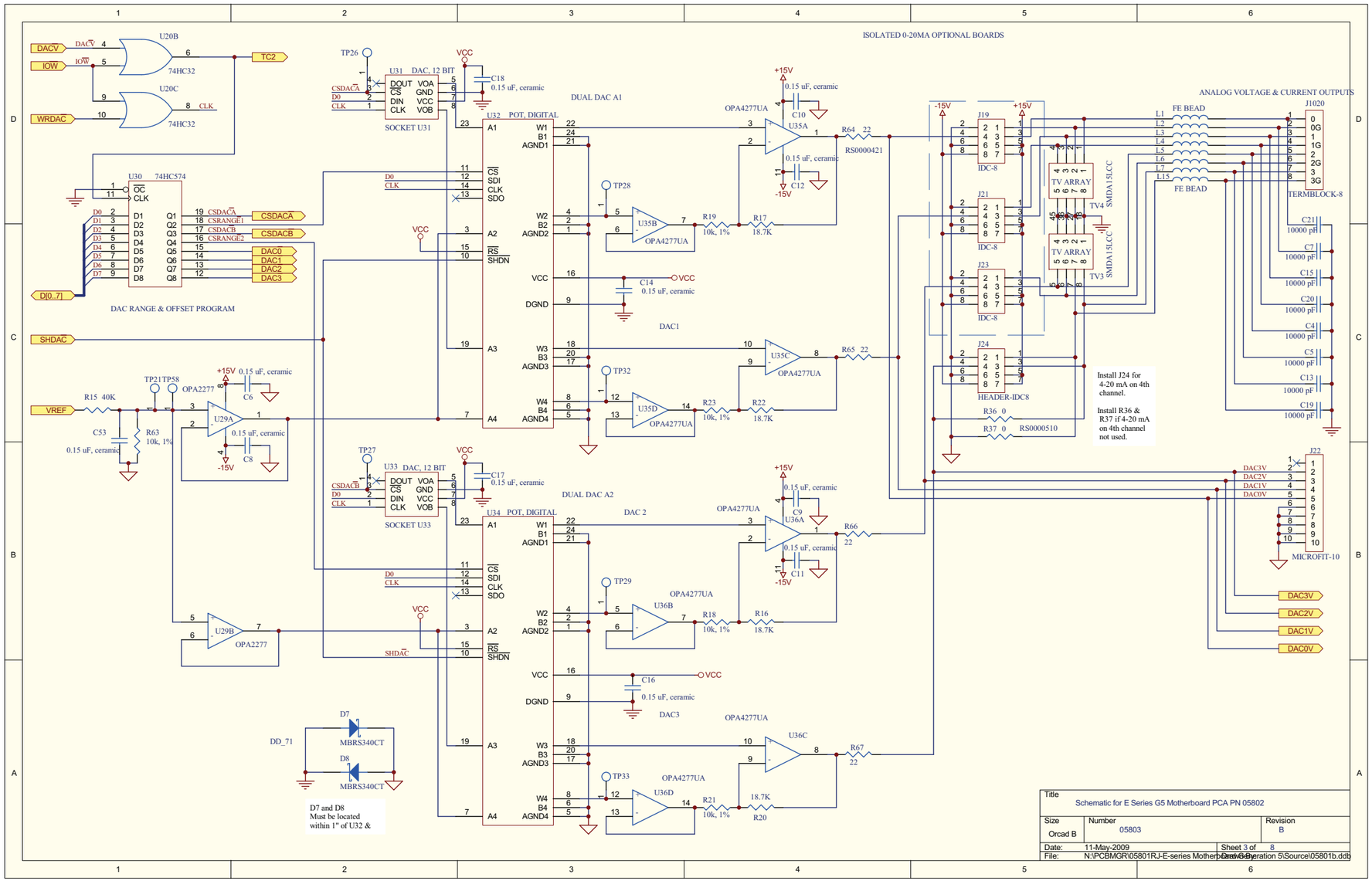
ISOLATED 0-20MA OPTIONAL BOARDS
ANALOG VOLTAGE & CURRENT OUTPUTS
DAC RANGE & OFFSET PROGRAM
DUAL DAC A1
DUAL DAC A2
DAC1
DAC2
DAC3
U20B
74HC32
U20C
74HC32
U30 74HC574
U31 DAC, 12 BIT
SOCKET U31
U32 POT, DIGITAL
U33 DAC, 12 BIT
SOCKET U33
U34 POT, DIGITAL
U35A
U35B
U35C
U35D
U36A
U36B
U36C
U36D
OPA4277UA
U29A
U29B
OPA2277
TP21
TP58
TP26
TP27
TP28
TP29
TP32
TP33
R15 40K
R63 10k, 1%
C53 0.15 uF, ceramic
C6 0.15 uF, ceramic
C8 0.15 uF, ceramic
C18 0.15 uF, ceramic
C17 0.15 uF, ceramic
C10 0.15 uF, ceramic
C12 0.15 uF, ceramic
C9 0.15 uF, ceramic
C11 0.15 uF, ceramic
C14 0.15 uF, ceramic
C16 0.15 uF, ceramic
R64 22
R65 22
R66 22
R67 22
RS0000421
R17 18.7K
R19 10k, 1%
R16 18.7K
R18 10k, 1%
R22 18.7K
R23 10k, 1%
R20 18.7K
R21 10k, 1%
R36 0
R37 0
RS0000510
J19
J21
J23
J24
IDC-8
HEADER-IDC8
TV ARRAY
SMDA15LCC
FE BEAD
J1020
TERMBLOCK-8
J22
MICROFIT-10
C21 10000 pH
C7 10000 pF
C15 10000 pF
C20 10000 pF
C4 10000 pF
C5 10000 pF
C13 10000 pF
C19 10000 pF
D7
D8
MBRS340CT
DD_71
D7 and D8
Must be located
within 1" of U32 &
Install J24 for
4-20 mA on 4th
channel.
Install R36 &
R37 if 4-20 mA
on 4th channel
not used.
DACV
IOW
WRDAC
SHDAC
VREF
CSDACA
CSDACB
D[0..7]
DAC0
DAC1
DAC2
DAC3
DAC3V
DAC2V
DAC1V
DAC0V
+15V
-15V
VCC
Title
Schematic for E Series G5 Motherboard PCA PN 05802
Size
Orcad B
Number
05803
Revision
B
Date: 11-May-2009
Sheet 3 of 8
File: N:\PCBMGR\05801RJ-E-series Motherboard\Gen 5 Generation 5\Source\05801b.ddb

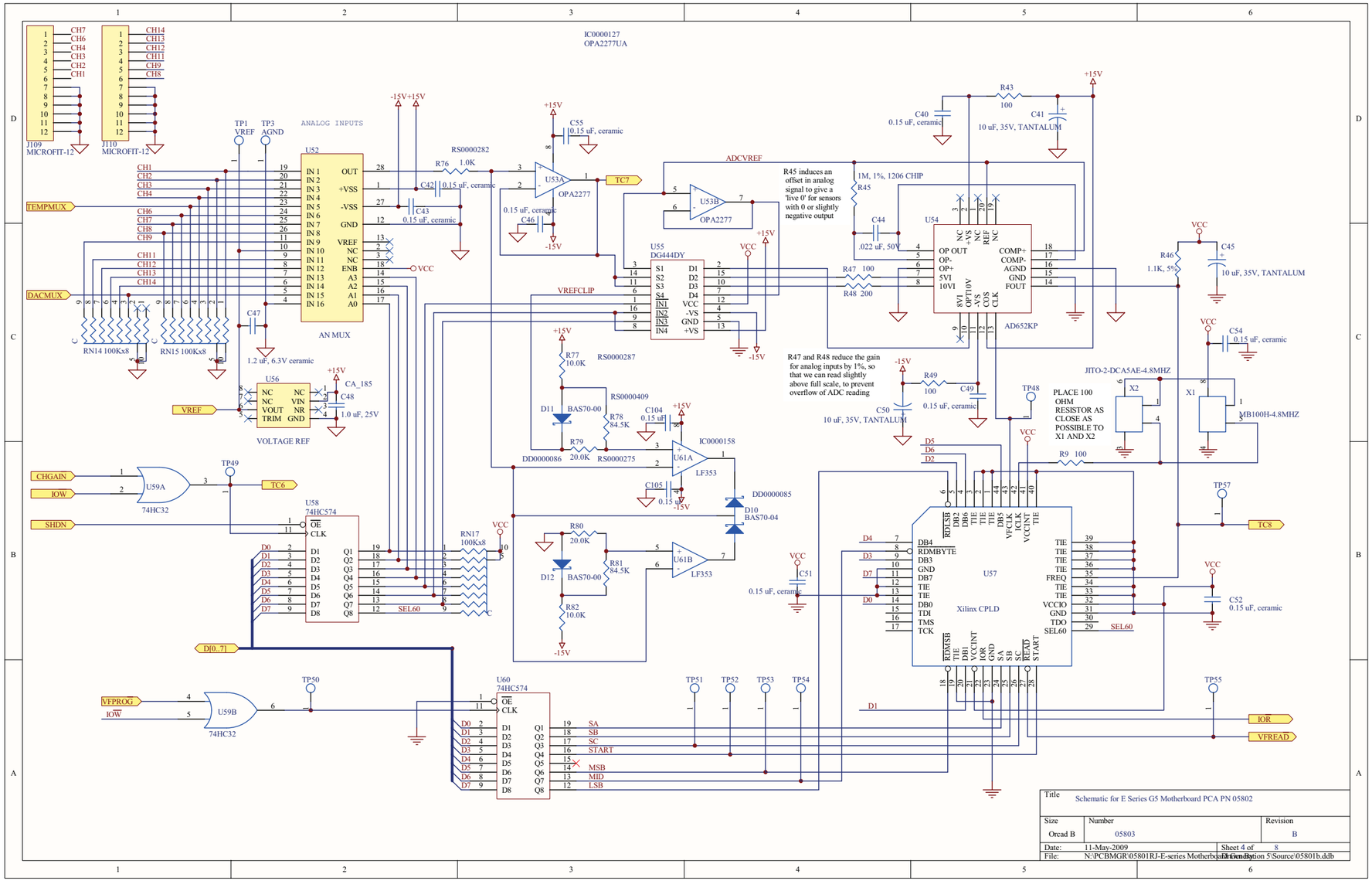
IC0000127
OPA2277UA
J109 MICROFIT-12
J110 MICROFIT-12
ANALOG INPUTS
TEMPMUX
DACMUX
AN MUX
RN14 100Kx8
RN15 100Kx8
1.2 uF, 6.3V ceramic
VOLTAGE REF
CA_185
1.0 uF, 25V
OPA2277
LF353
74HC32
74HC574
RN17 100Kx8
SEL60
D[0..7]
VFPROG
IOW
SHDN
ADCVREF
VREFCLIP
DG444DY
AD652KP
R45 induces an offset in analog signal to give a 'live 0' for sensors with 0 or slightly negative output
R47 and R48 reduce the gain for analog inputs by 1%, so that we can read slightly above full scale, to prevent overflow of ADC reading
JITO-2-DCA5AE-4.8MHZ
MB100H-4.8MHZ
PLACE 100 OHM RESISTOR AS CLOSE AS POSSIBLE TO X1 AND X2
Xilinx CPLD
SA
SB
SC
MSB
MID
LSB
IOR
VFREAD
START
Title Schematic for E Series G5 Motherboard PCA PN 05802
Size Orcad B
Number 05803
Revision B
Date: 11-May-2009
Sheet 4 of 8

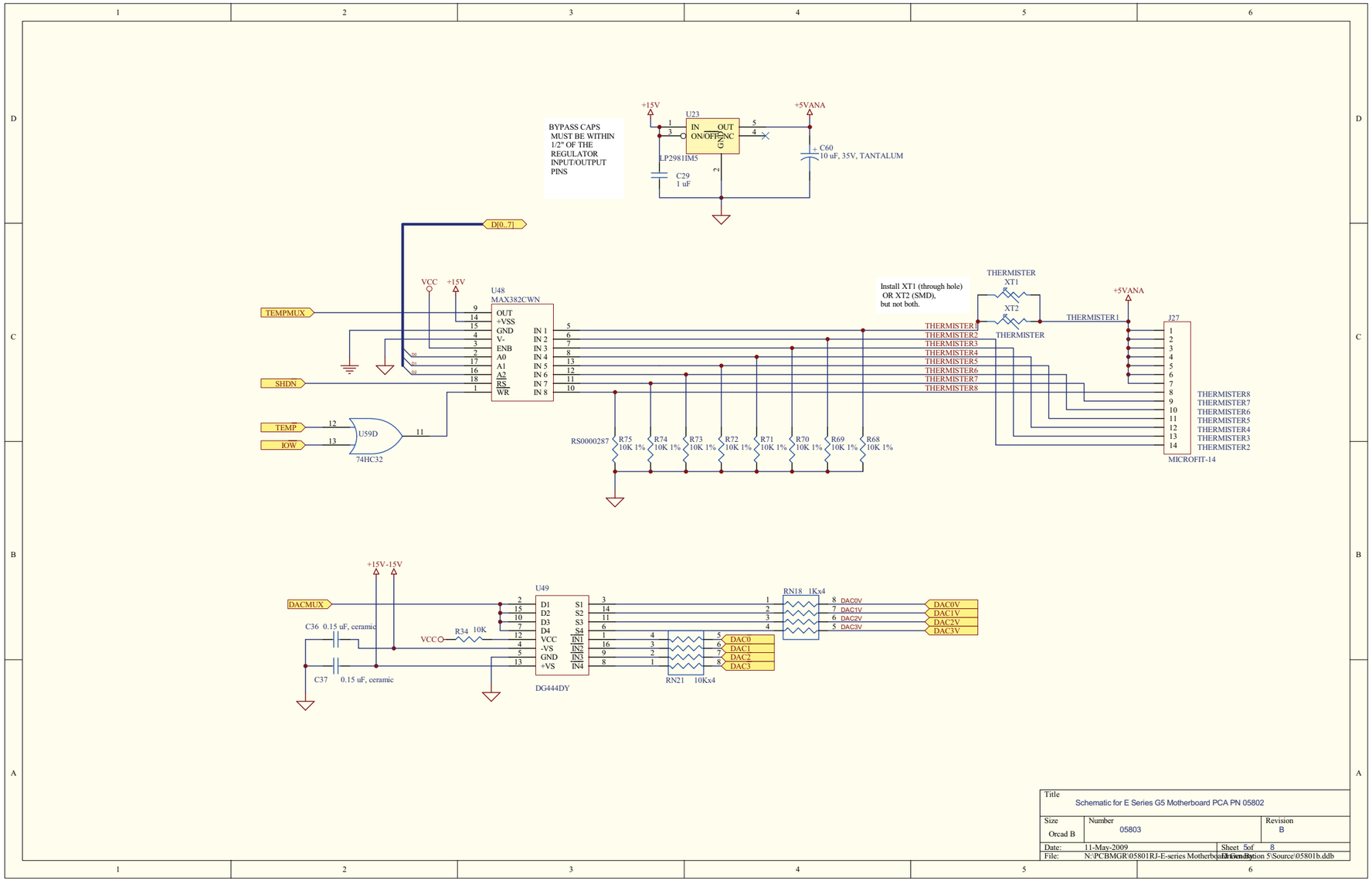

Title	Schematic for E Series G5 Motherboard PCA PN 05802
Size: Orcad B	Number: 05803
Revision: B	
Date: 11-May-2009	Sheet 5 of 8
File: N:\PCBMGR\05801RJ-E-series Motherboard\Revision 5\Source\05801b.ddb	Drawn By:

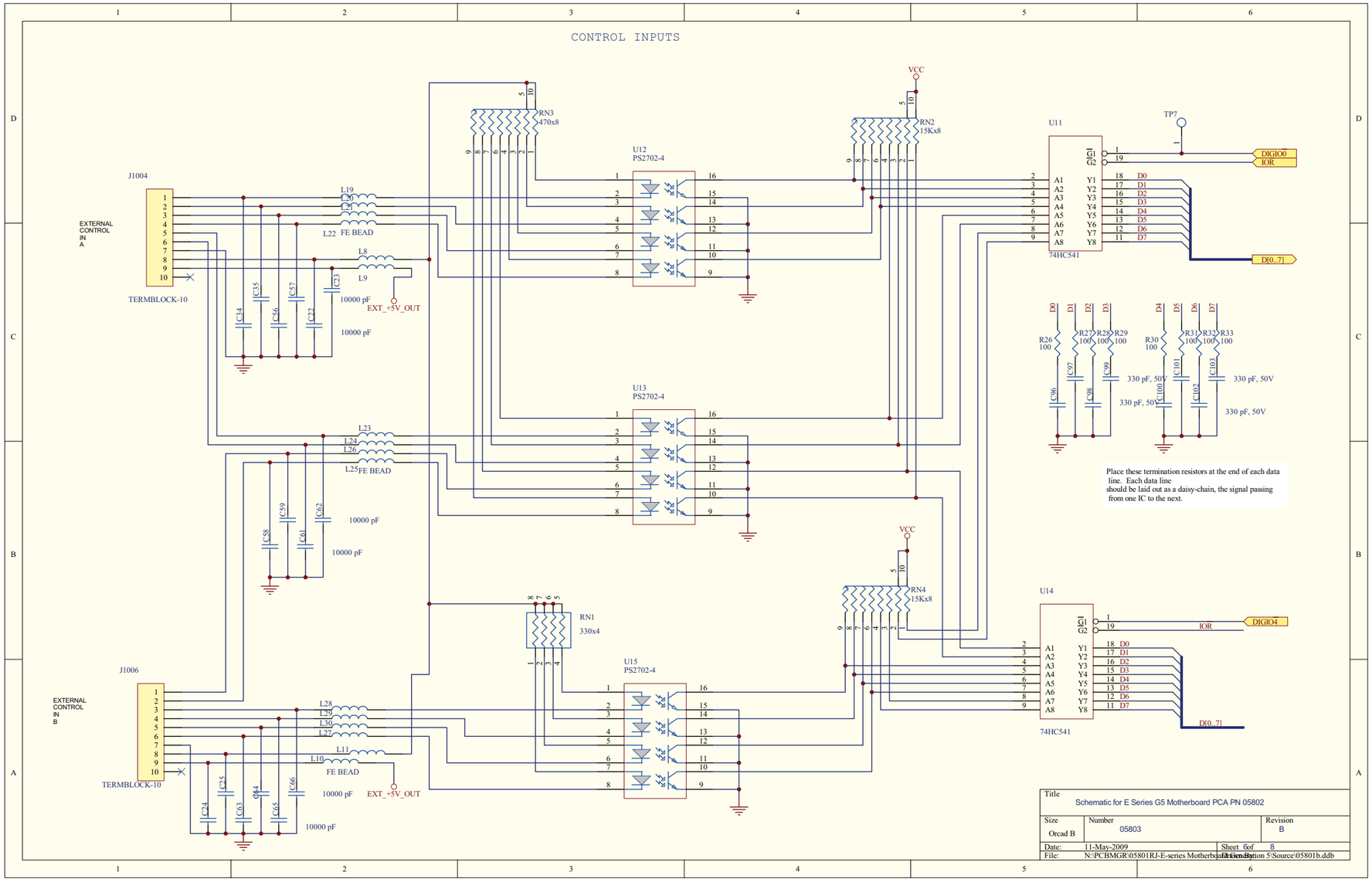
CONTROL INPUTS
J1004
EXTERNAL CONTROL IN A
TERMBLOCK-10
L19
L20
L21
L22 FE BEAD
L8
L9
C34
C35
C56
C57
C22
C23
10000 pF
EXT_+5V_OUT
RN3
470x8
U12
PS2702-4
VCC
RN2
15Kx8
U11
74HC541
TP7
DIGIO0
IOR
D[0..7]
D0
D1
D2
D3
D4
D5
D6
D7
R26 100
R27 100
R28 100
R29 100
R30 100
R31 100
R32 100
R33 100
C96
C97
C98
C99
C100
C101
C102
C103
330 pF, 50V
Place these termination resistors at the end of each data line. Each data line should be laid out as a daisy-chain, the signal passing from one IC to the next.
J1006
EXTERNAL CONTROL IN B
TERMBLOCK-10
L23
L24
L26
L25 FE BEAD
L28
L29
L30
L27
L11
L10 FE BEAD
C58
C59
C61
C62
C24
C25
C63
C64
C65
C66
10000 pF
EXT_+5V_OUT
U13
PS2702-4
RN1
330x4
U15
PS2702-4
RN4
15Kx8
U14
74HC541
DIGIO4
IOR
D[0..7]
Title
Schematic for E Series G5 Motherboard PCA PN 05802
Size
Orcad B
Number
05803
Revision
B
Date: 11-May-2009
Sheet 6 of 8
File: N:\PCBMGR\05801RJ-E-series Motherboard Gen5\Section 5\Source\05801b.ddb

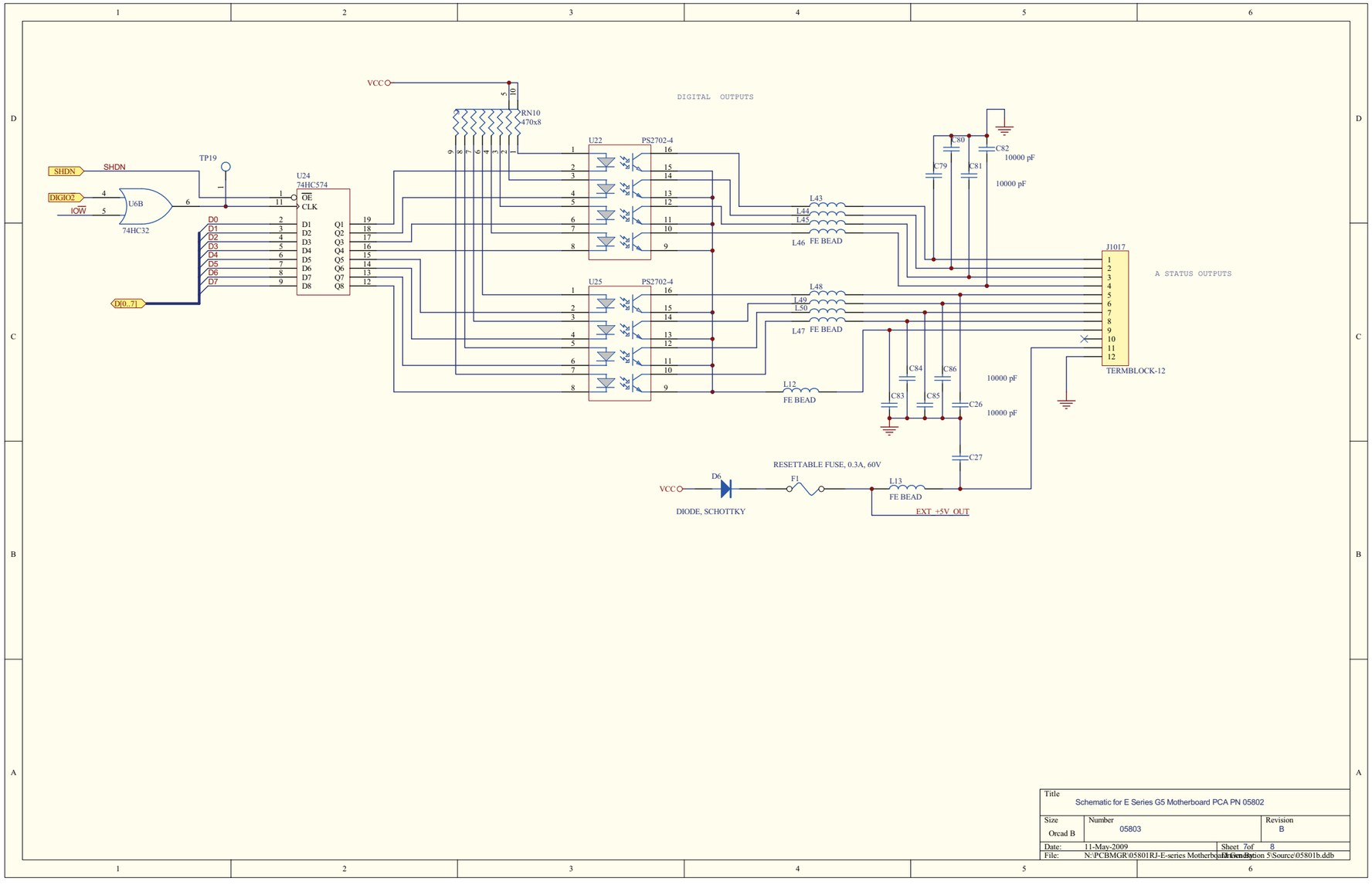
DIGITAL OUTPUTS
VCC
RN10
470x8
SHDN
DIGIO2
IOW
U6B
74HC32
TP19
U24
74HC574
OE
CLK
D0
D1
D2
D3
D4
D5
D6
D7
D[0..7]
U22
PS2702-4
U25
PS2702-4
L43
L44
L45
L46 FE BEAD
L48
L49
L50
L47 FE BEAD
L12
FE BEAD
C80
C82
10000 pF
C79
C81
10000 pF
C84
C86
C83
C85
C26
10000 pF
C27
J1017
A STATUS OUTPUTS
TERMBLOCK-12
RESETTABLE FUSE, 0.3A, 60V
D6
F1
L13
FE BEAD
DIODE, SCHOTTKY
EXT +5V OUT
Title
Schematic for E Series G5 Motherboard PCA PN 05802
Size
Orcad B
Number
05803
Revision
B
Date: 11-May-2009
Sheet 7of 8
File: N:\PCBMGR\05801RJ-E-series Motherboard\Revision 5\Source\05801b.ddb

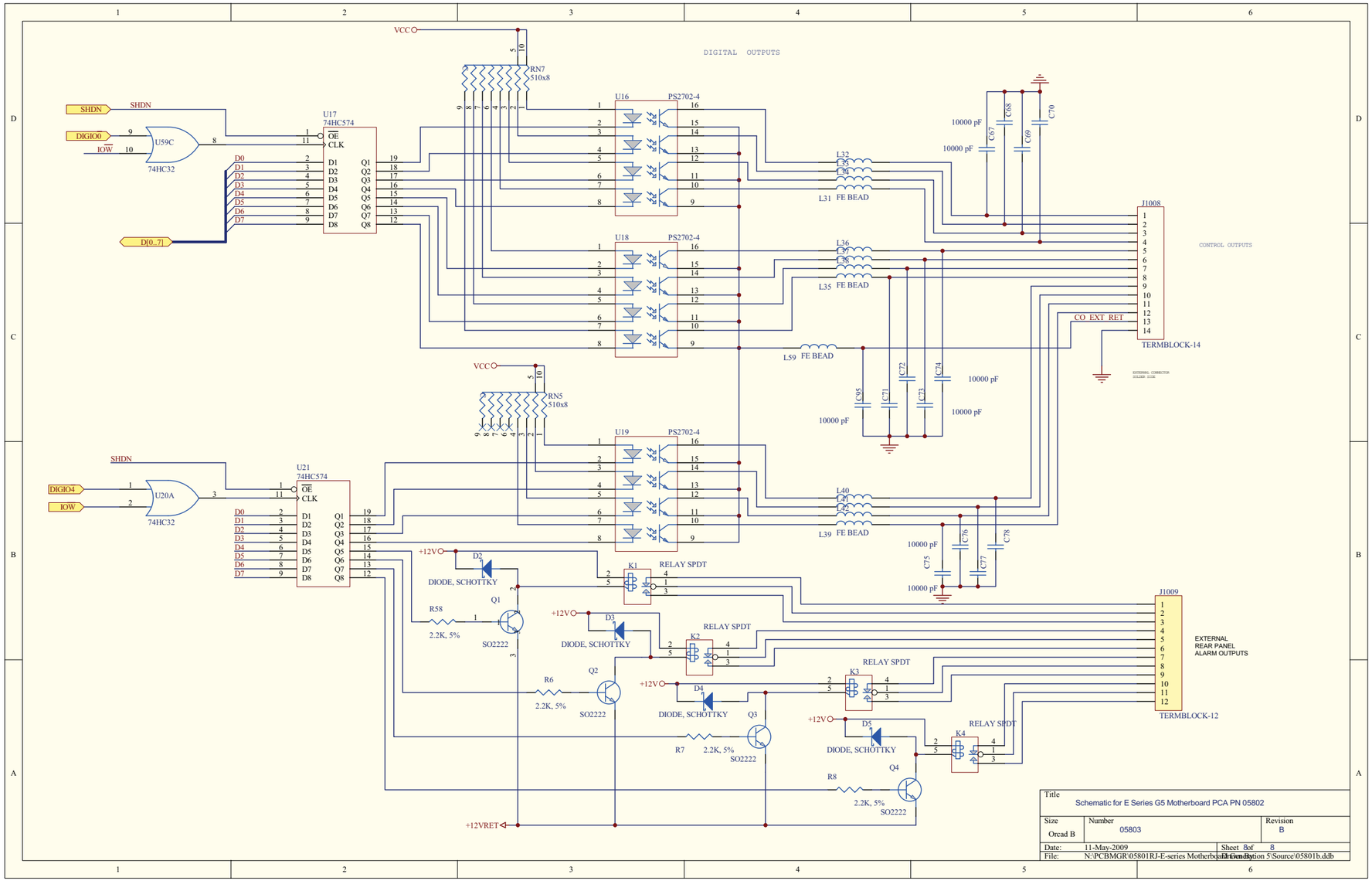
DIGITAL OUTPUTS
VCC
SHDN
DIGIO0
IOW
U59C
74HC32
U17
74HC574
OE
CLK
D0
D1
D2
D3
D4
D5
D6
D7
D[0..7]
Q1
Q2
Q3
Q4
Q5
Q6
Q7
Q8
RN7
510x8
U16
PS2702-4
U18
U19
L32
L31 FE BEAD
L36
L35 FE BEAD
L59 FE BEAD
L40
L39 FE BEAD
10000 pF
C67
C68
C69
C70
C72
C74
C95
C71
C73
J1008
CONTROL OUTPUTS
CO EXT RET
TERMBLOCK-14
RN5
510x8
U21
U20A
+12V
D2
DIODE, SCHOTTKY
K1
RELAY SPDT
Q1
R58
2.2K, 5%
SO2222
D3
K2
Q2
R6
D4
K3
Q3
R7
D5
K4
Q4
R8
+12VRET
C75
C76
C77
C78
J1009
EXTERNAL
REAR PANEL
ALARM OUTPUTS
TERMBLOCK-12
Title
Schematic for E Series G5 Motherboard PCA PN 05802
Size
Orcad B
Number
05803
Revision
B
Date:
11-May-2009
Sheet 8of 8
File:
N:\PCBMGR\05801RJ-E-series Motherboard Revision 5\Source\05801b.ddb

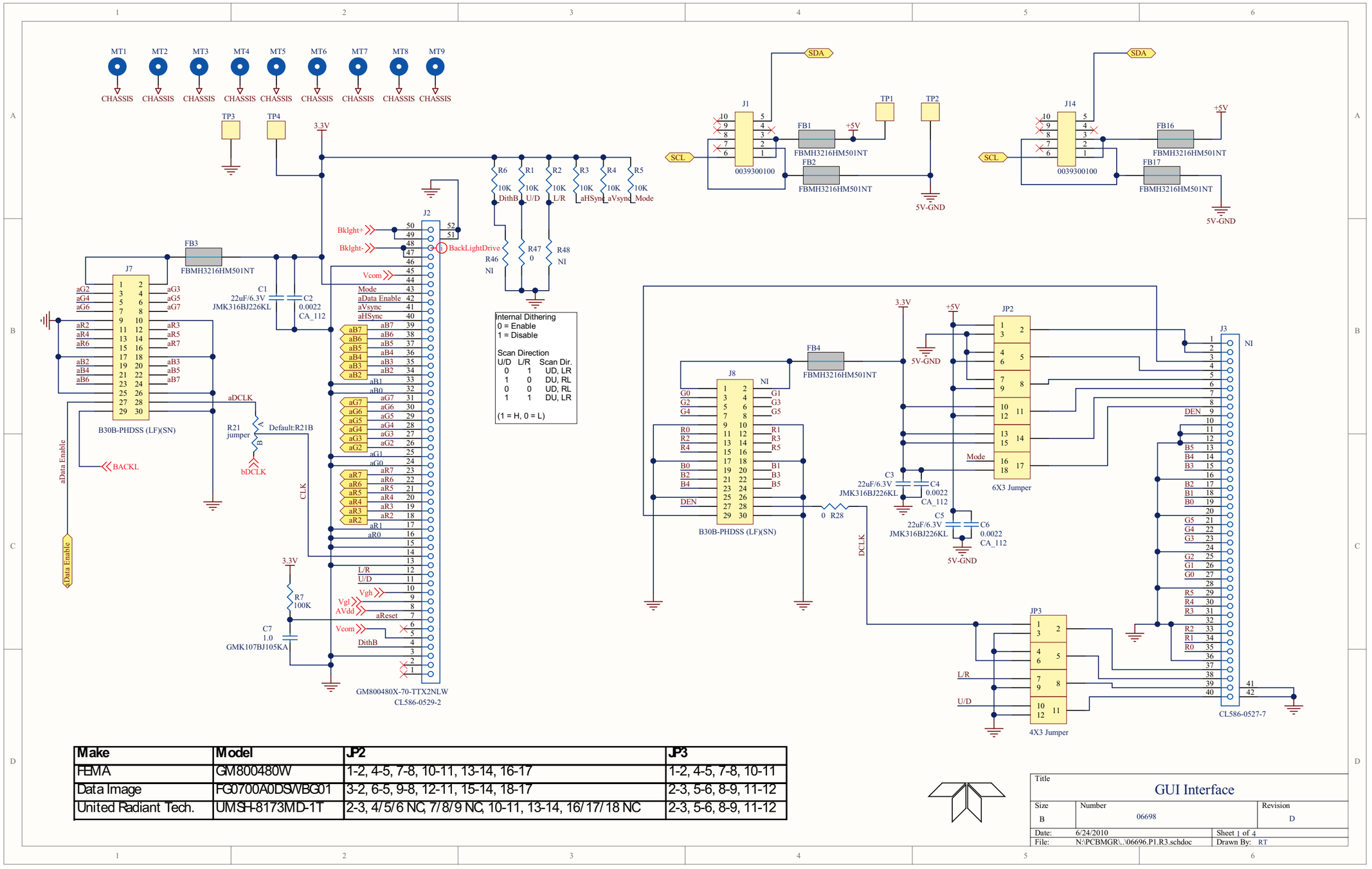

Make	Model	JP2	JP3
FEMA	GM800480W	1-2, 4-5, 7-8, 10-11, 13-14, 16-17	1-2, 4-5, 7-8, 10-11
Data Image	FG0700A0DSWBG01	3-2, 6-5, 9-8, 12-11, 15-14, 18-17	2-3, 5-6, 8-9, 11-12
United Radiant Tech.	UMSH-8173MD-1T	2-3, 4/5/6 NC, 7/8/9 NC, 10-11, 13-14, 16/17/18 NC	2-3, 5-6, 8-9, 11-12

Title	GUI Interface	
Size: B	Number: 06698	Revision: D
Date: 6/24/2010		Sheet 1 of 4
File: N:\PCBMGR\..\06696.P1.R3.schdoc		Drawn By: RT

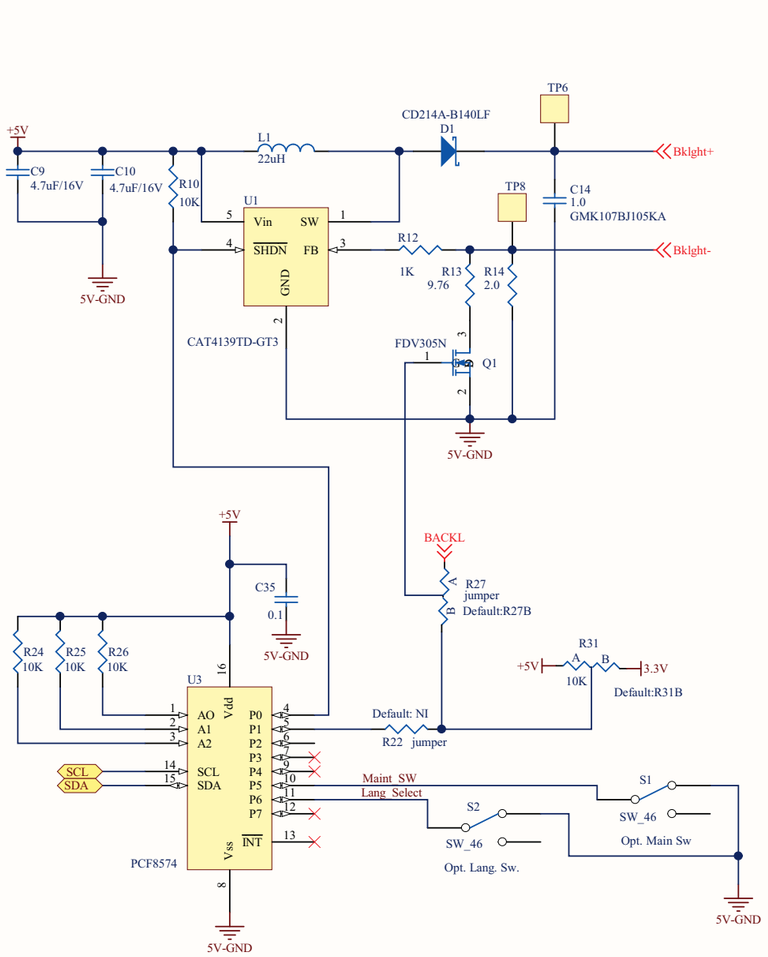

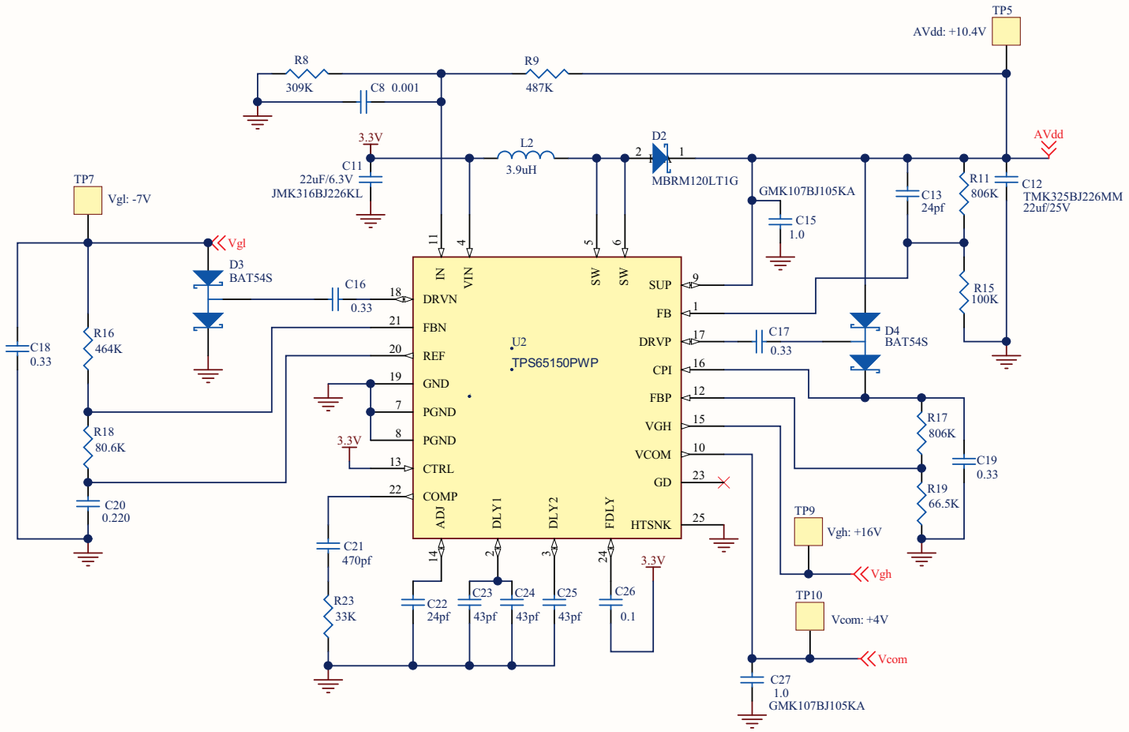

Backlight Brightness Control

Control Mode	R22	R27	R31
Remote – Video Port	NO	A	NO
Remote – I2C	YES	B	NO
Fixed Bright (default)	NO	B	B

Title	GUI Interface		
Size: B	Number: 06698		Revision: D
Date: 6/24/2010		Sheet 2 of 4	
File: N:\PCBMGR\..\06696.P2.R3.schdoc		Drawn By: RT	

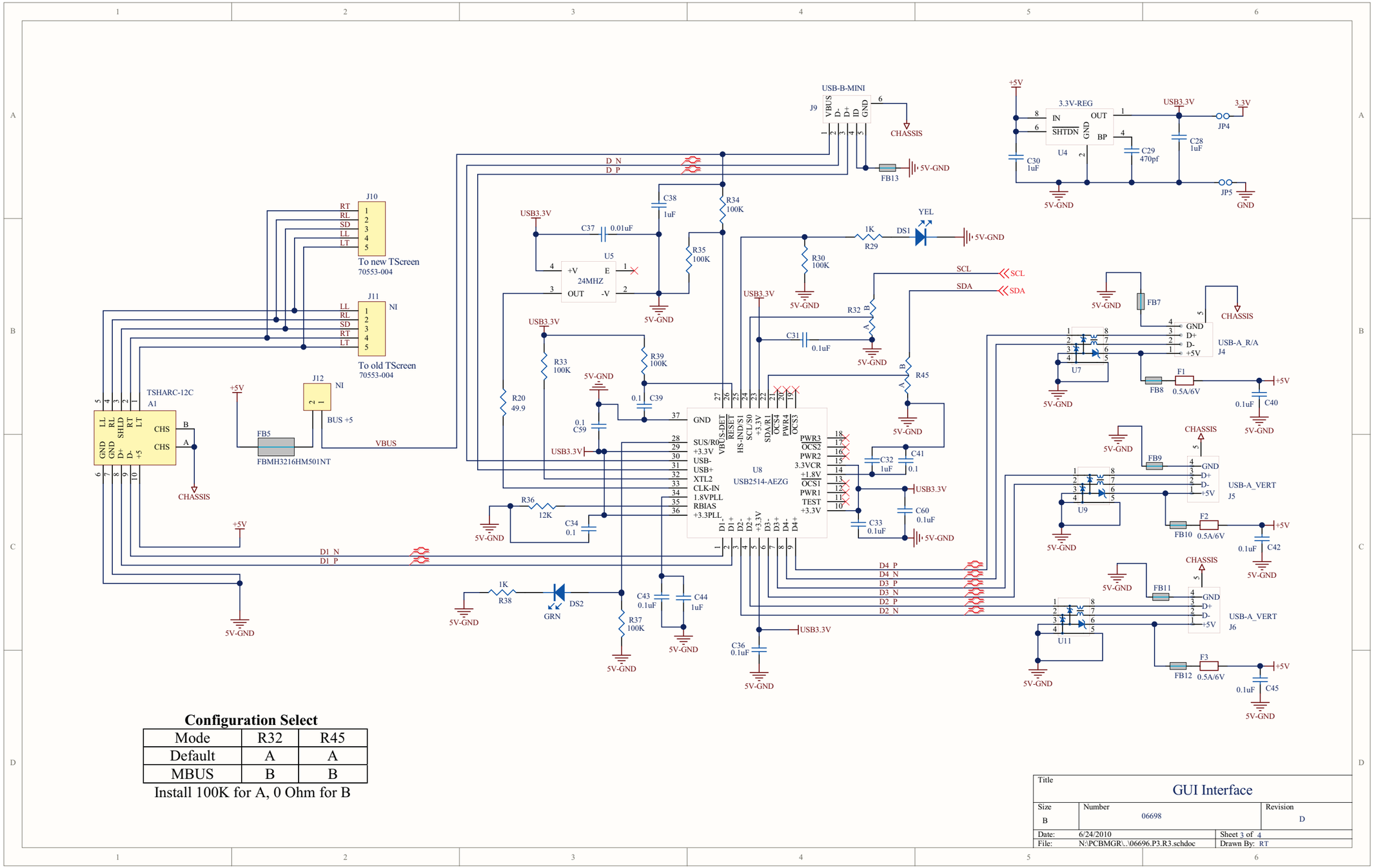

Configuration Select

Mode	R32	R45
Default	A	A
MBUS	B	B

Install 100K for A, 0 Ohm for B

Title	GUI Interface	
Size: B	Number: 06698	Revision: D
Date: 6/24/2010		Sheet 3 of 4
File: N:\PCBMGR\..\06696.P3.R3.schdoc		Drawn By: RT

TOUCH SCREEN INTERFACE CIRCUITRY (TBD)

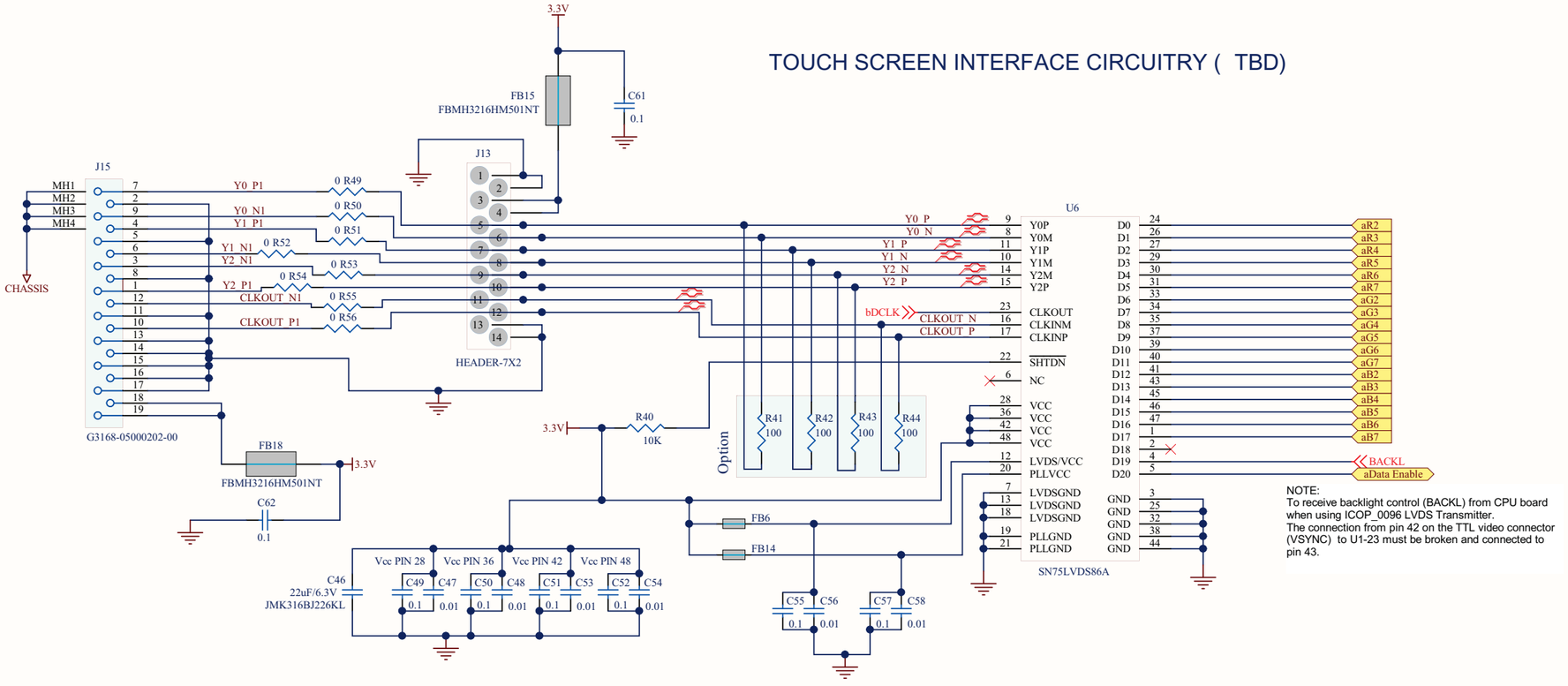

Title	GUI Interface		
Size: B	Number: 06698	Revision: D	
Date: 6/24/2010		Sheet 4 of 4	
File: N:\PCBMGR\..\06696.P4.R3.schdoc		Drawn By: RT	

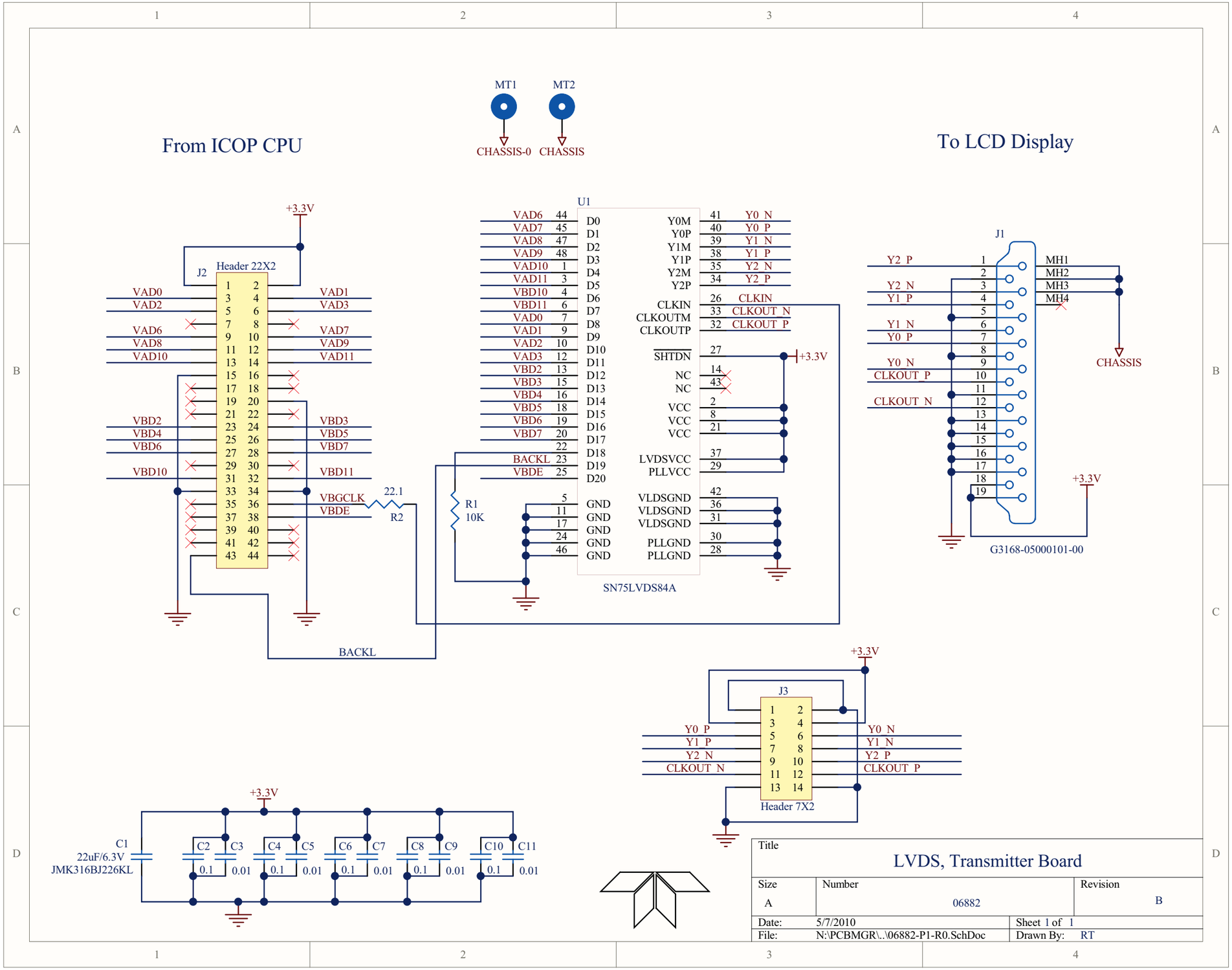
MT1
MT2
CHASSIS-0
CHASSIS
From ICOP CPU
To LCD Display
+3.3V
J2
Header 22X2
VAD0
VAD1
VAD2
VAD3
VAD6
VAD7
VAD8
VAD9
VAD10
VAD11
VBD2
VBD3
VBD4
VBD5
VBD6
VBD7
VBD10
VBD11
VBGCLK
VBDE
22.1
R2
BACKL
U1
VAD6 44
VAD7 45
VAD8 47
VAD9 48
VAD10 1
VAD11 3
VBD10 4
VBD11 6
VAD0 7
VAD1 9
VAD2 10
VAD3 12
VBD2 13
VBD3 15
VBD4 16
VBD5 18
VBD6 19
VBD7 20
BACKL 23
VBDE 25
D0
D1
D2
D3
D4
D5
D6
D7
D8
D9
D10
D11
D12
D13
D14
D15
D16
D17
D18
D19
D20
GND
Y0M 41 Y0_N
Y0P 40 Y0_P
Y1M 39 Y1_N
Y1P 38 Y1_P
Y2M 35 Y2_N
Y2P 34 Y2_P
CLKIN 26 CLKIN
CLKOUTM 33 CLKOUT_N
CLKOUTP 32 CLKOUT_P
SHTDN 27
NC 14
NC 43
VCC 2
VCC 8
VCC 21
LVDSVCC 37
PLLVCC 29
VLDSGND 42
VLDSGND 36
VLDSGND 31
PLLGND 30
PLLGND 28
R1
10K
SN75LVDS84A
J1
Y2_P
Y2_N
Y1_P
Y1_N
Y0_P
Y0_N
CLKOUT_P
CLKOUT_N
MH1
MH2
MH3
MH4
CHASSIS
G3168-05000101-00
J3
Header 7X2
C1
22uF/6.3V
JMK316BJ226KL
C2 C3 C4 C5 C6 C7 C8 C9 C10 C11
0.1
0.01
Title
LVDS, Transmitter Board
Size
A
Number
06882
Revision
B
Date: 5/7/2010
Sheet 1 of 1
File: N:\PCBMGR\..\06882-P1-R0.SchDoc
Drawn By: RT

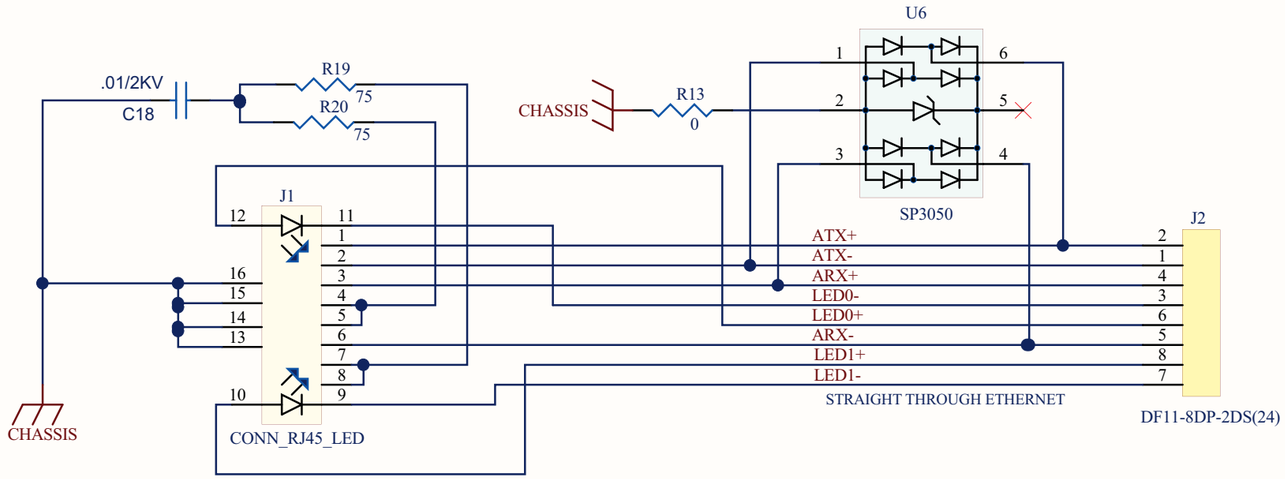

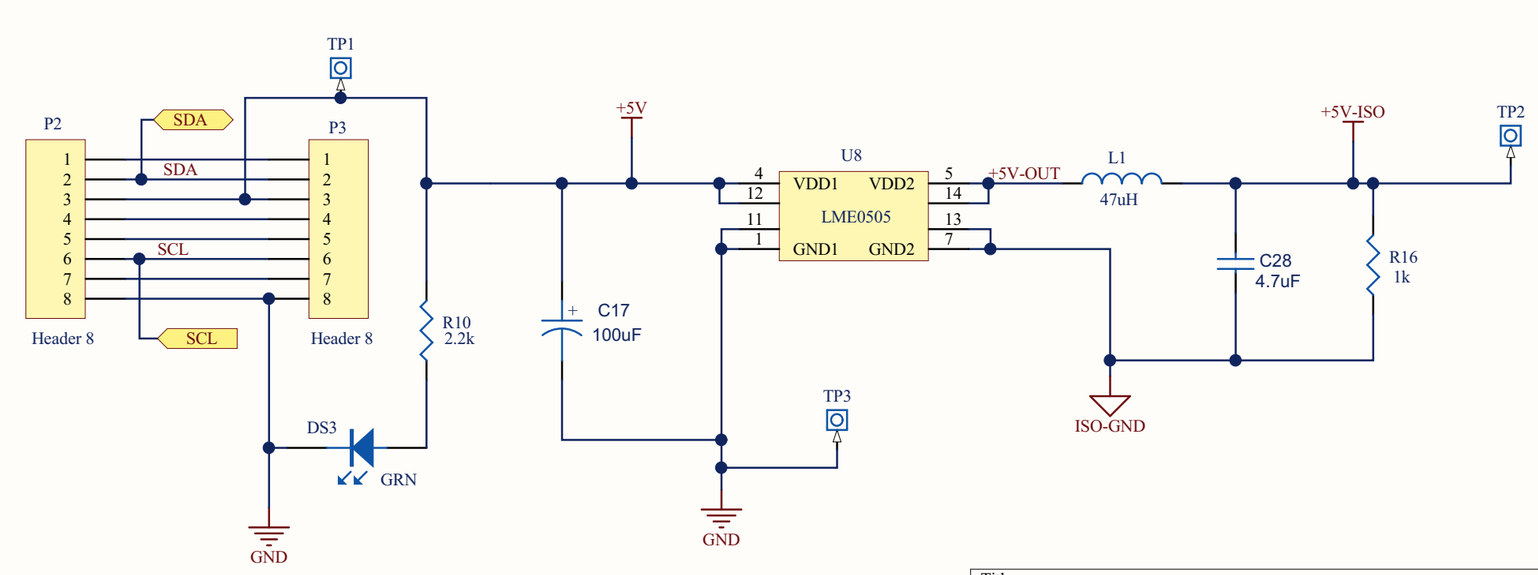

DCN:6092

PRINTED DOCUMENTS ARE UNCONTROLLED

Title		
Auxiliary I/O Board (PWR-ETHERNET)		
Size: A	Number: 06731	Revision: B
Date: 5/6/2011		Sheet 1 of 3
File: N:\PCBMGR\..\06731-1_ETHERNET.SchDoc		Drawn By: RT

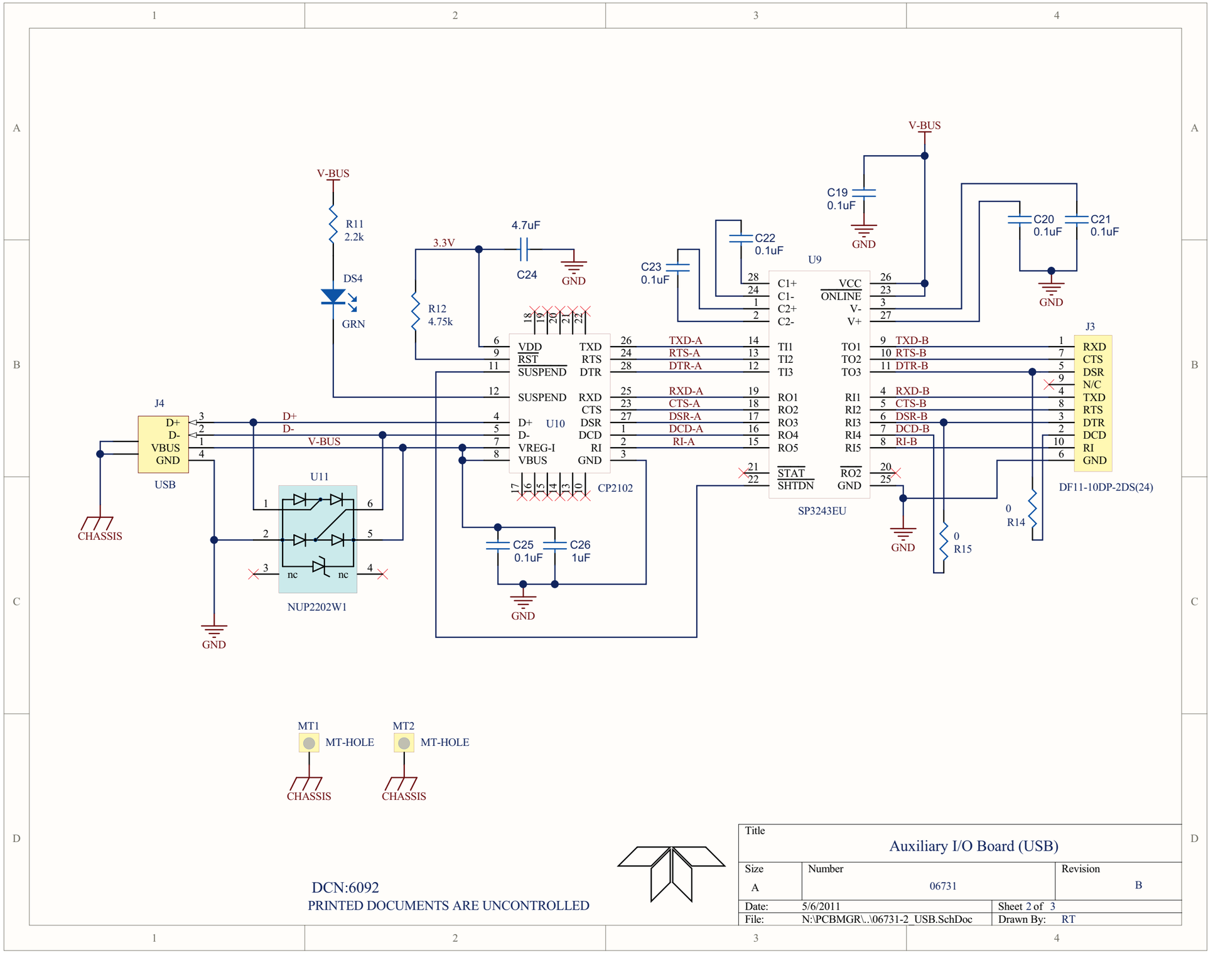

DCN:6092

PRINTED DOCUMENTS ARE UNCONTROLLED

Title		
Auxiliary I/O Board (USB)		
Size: A	Number: 06731	Revision: B
Date: 5/6/2011	Sheet 2 of 3	
File: N:\PCBMGR\..\06731-2_USB.SchDoc	Drawn By: RT	

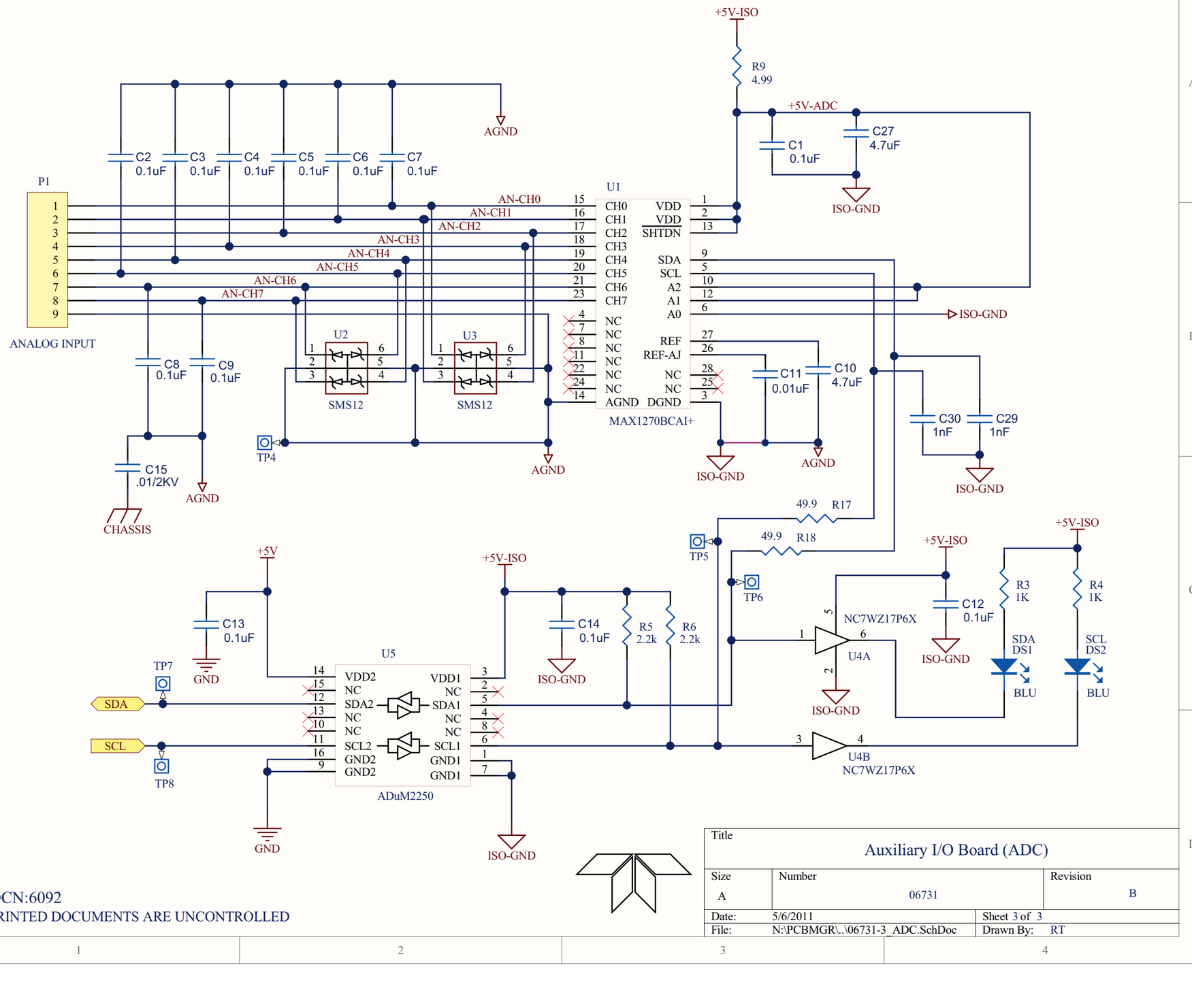
P1
ANALOG INPUT
AN-CH0
AN-CH1
AN-CH2
AN-CH3
AN-CH4
AN-CH5
AN-CH6
AN-CH7
C2 0.1uF
C3 0.1uF
C4 0.1uF
C5 0.1uF
C6 0.1uF
C7 0.1uF
AGND
C8 0.1uF
C9 0.1uF
C15 .01/2KV
CHASSIS
U2
SMS12
U3
SMS12
TP4
U1
CH0
CH1
CH2
CH3
CH4
CH5
CH6
CH7
AGND
NC
NC
NC
NC
NC
NC
NC
VDD
VDD
SHTDN
SDA
SCL
A2
A1
A0
REF
REF-AJ
NC
NC
DGND
MAX1270BCAI+
+5V-ISO
R9 4.99
+5V-ADC
C1 0.1uF
C27 4.7uF
ISO-GND
ISO-GND
C11 0.01uF
C10 4.7uF
C30 1nF
C29 1nF
ISO-GND
AGND
ISO-GND
49.9 R17
49.9 R18
TP5
TP6
+5V
C13 0.1uF
GND
TP7
SDA
SCL
TP8
U5
VDD2
NC
SDA2
NC
NC
SCL2
GND2
GND2
VDD1
NC
SDA1
NC
NC
SCL1
GND1
GND1
ADuM2250
GND
+5V-ISO
C14 0.1uF
ISO-GND
R5 2.2k
R6 2.2k
ISO-GND
NC7WZ17P6X
U4A
U4B
NC7WZ17P6X
+5V-ISO
C12 0.1uF
ISO-GND
R3 1K
R4 1K
SDA DS1
SCL DS2
BLU
BLU
+5V-ISO
DCN:6092
PRINTED DOCUMENTS ARE UNCONTROLLED
Title
Auxiliary I/O Board (ADC)
Size
A
Number
06731
Revision
B
Date: 5/6/2011
Sheet 3 of 3
File: N:\PCBMGR\..\06731-3_ADC.SchDoc
Drawn By: RT